





PRODUCT CATALOG JULY 2025

ProTeam®

Game Changing Innovation

1983
First lightweight backpack vacuum developed in Larry Shideler's garage out of PVC pipe

1987
ProTeam opens manufacturing plant in Boise, Idaho & implements Cleaning for Health®

1990
ProTeam introduces Four Level® Filtration - an improved approach to vacuum cleaner filtration

1991
ProTeam introduces Team Cleaning® seminars — an organized system to improve productivity, efficiency, quality and safety of cleaning programs

2002
ProTeam offers exclusive partnership with the American Lung Association

2003
ProTeam introduces the first battery powered backpack to the commercial marketplace

2009
ProTeam becomes part of the globally operating Emerson Professional Tools platform

2010
ProTeam introduces a new line, the ProGuard Wet / Dry Vacuums

2012
ProTeam launches the next generation in cleaning comfort, the Super Coach Pro Series

2014
ProTeam launches ProTeam University, ProGen 12 / 15 units, & improves GoFree Flex Pro battery

2016
ProTeam launches new website

2017
ProTeam improves GoFree® Flex Pro battery vacuum with longest runtime in the market

2018
ProTeam launches FlexFit® Comfort Harness

2020
ProTeam launches GoFree Flex Pro II battery vacuum

2022
ProTeam launches the GoFit Series vacuums

2024
ProTeam releases the GoFit Cordless Series— a lineup of battery-operated backpack vacuums

2025
ProTeam launches GoFit 6 HEPA

EMERSON

Partners in Indoor Air Quality Education

American Lung Association. | NATIONAL PROUD PARTNER
We Support Healthy Air | Lung.org

ProTeam is a proud partner of the American Lung Association. Together, we fight for clean indoor air so that we all can breathe easier. We spend the majority of our time indoors, so breathing healthy air where we live, work and play is critical.

ProTeam is committed to developing innovative cleaning technologies to address indoor air quality concerns and supporting the American Lung Association in their strategic imperative to improve the air we breathe.

For more information on indoor air quality, call **1-800-LUNG-USA or visit Lung.org.**

The American Lung Association does not endorse product, device or service.

Cleaning for Health®

Improved Air Quality

ProTeam vacuums retrieve soil and safely contain harmful particles within a ProLevel Filtration® System, featuring multiple levels of filters, preventing them from being reintroduced back into the environment.

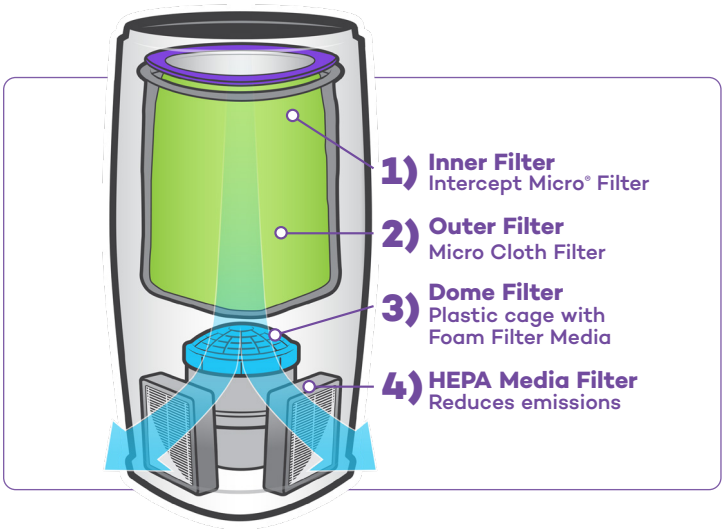

Filtration

ProLevel Filtration technology better captures microscopic dust that may harm health and trigger asthma or allergies. Most ProTeam vacuums have Four Levels of Filtration, each level designed to sift out smaller and smaller particles. The Intercept Micro® Filter is the first line of defense.

The GoFit Series, Super Coach Pro Series, and GoFree Flex Pro II have a revolutionary filtration system to reduce emissions. Easy-access, post-motor filter made from HEPA Media, capture and contain microscopic particulates and carbon dust.

The New GoFit Cordless Series features a brushless motor and therefore doesn't need an exhaust filter to capture carbon dust. These vacuums include an Intercept Micro Filter, Micro Cloth filter and a Dome Filter with HEPA Media.

The unique ProTeam method of suction-vacuuming cleans carpets, hard floors, and their surfaces without stirring up dust – so the air stays cleaner, the furniture collects less dust, and operators can work without breathing unhealthy air.

Table Of Contents

ProTeam Products:

GoFit 10 2
GoFit 6 / 6 PLUS 3
GoFit 3 4
GoFIt 3 Cordless 5
GoFIt 6 Cordless 6
GoFree Flex Pro II 7
Super Coach Pro® 10 8
Super Coach Pro 6 9
ProGen® 12 / 15 10
ProForce® 1200XP / 1500XP 11
GoFit 6 HEPA 12
ProVac FS 6 13
ProBlitz® AirMover 14
ProGuard 4 Portable 15
ProGuard 10 16
ProGuard 16 MD 16
ProGuard 15 / 20 17
Attachment Kits 18-20
Wands 21
Individual Attachments 22-24
Filters 25-26
Batteries & Chargers 26
Point-of-Purchase Items 27
Accessories 27
Replacement Parts 28

ProTeam Parts Lists:

GoFit 3, 6, 6 PLUS, 6 HEPA, 10 Parts 29
GoFit 3 Cordless / GoFit 6 Cordless Parts 30
Super Coach Pro 10 / Super Coach Pro 6 / ProVac FS 6 Parts 31
Super CoachVac Parts 32
Super QuarterVac Parts 33
MegaVac Parts 34
GoFree Flex Pro II Parts 35
ProGen 12 / 15 Parts 36-37
ProForce 1500XP / 1200XP Parts 38-39
LineVacer Parts 40
ProBlitz AirMover Parts / ProGuard 4 Portable Parts 41
ProGuard 4 Parts 41
ProGuard 10 Parts 42
ProGuard 16 MD Parts 42
ProGuard 15 / 20 Parts 43
Parts Index 44-48
Product Warranty 49
Sales Representatives ..... Back Cover

Pricing and Specifications
Prices effective 7/1/2025. All specifications and offers are in effect at the time of printing and are subject to change without notice. Performance calculation specs are based on average motor specs or average vacuum system performance. See individual product page for reference. Sound testing based on ASTM F1334-14.

Warranty Info
Most ProTeam products carry an unmatched limited 3 year parts, labor and motor warranty. Limited lifetime warranty on molded body parts for backpack vacuums. Please see page 64 for complete warranty details. Battery products and specialty wet/dry vacuums excluded, refer to individual products.

ProTeam products made from HEPA media fall under different product categories:

Triangular Backpacks
The filtration value of ProTeam's ProLevel Filtration® System in this vacuum is achieved by the use of a multi-stage filtration system, including intercept micro filter, micro cloth filter, plastic cage with foam filter, and post-motor filter made from HEPA media, as tested per ASTM F3150.

Upright Vacuums
The filtration value of ProTeam's ProLevel Filtration® System in this vacuum is achieved by the use of a multi-stage filtration system, including intercept micro filter, foam filter, and post-motor filter made from HEPA Media, as tested per ASTM F3150.

Trademarks and Patents
ProTeam, Super Coach Pro, Super CoachVac, LineVacer, ProVac, AviationVac, RunningVac, ProForce, ProGen, QuietPro, GoCartVac, GoFree, Super QuarterVac, FlexFit, Super HalfVac, ProGuard, ProBlitz, Qwik Lock, ProDuster, Cleaning for Health, Four Level, ProLevel Filtration, JetSweep, Intercept Micro, QuietPower, Xover, ProBlade, FreeFlex, GoFit and Team Cleaning are trademarks and registered trademarks of ProTeam, Inc. ManageMen is a registered trademark of ManageMen in the USA. Velcro is a registered trademark of Velcro Industries in the USA.

Terms and Conditions of Sale
All products listed in this category are sold pursuant to ProTeam, Inc. terms and conditions of sale found at https://proteam.emerson.com/en-us/terms-of-sale.

© 2007-2025 ProTeam, Inc. All Rights Reserved.

ProTeam GoFit® 10

CERTIFIED GOLD



107688* GoFit 10 w/Xover Telescoping Wand Kit D (107100)

$720

The GoFit 10-qt combines ProTeam's innovative quick-adjust harness with a large capacity triangular shape capable of capturing sizeable debris. Plus, it provides comfort and ease of use as its weight is evenly distributed. That means, no matter how you move, you'll experience better balance.





NO TOOLS REQUIRED

ERGONOMIC

CLEANING FOR HEALTH

Specifications

Weight:	12.9 lbs. / 5.85 kg.
Motor Airflow:	153 CFM
Static Lift:	91 in.
Motor:	1296 W / 10.8 A
Decibel:	67.2 dBA
Capacity:	10 qt. / 11 L
ProLevel Filtration® w/Four Levels of Filtration:	1372 sq. in. total area

**ProLevel Filtration System with HEPA Media

Captures 99.8% at 0.3-0.5 microns per ASTM F3150

Limited Warranty

- 3 years parts, labor and motor on vacuum
- Limited lifetime on molded body parts

*Standard Configuration

14" Xover Floor Tool	3" Dust Brush
Telescoping Wand	17" Crevice Tool
5" Upholstery Tool	

Related Products

107313	Intercept Micro® Filters, 10/pk (open collar)	$34.27
107680	Intercept Micro Filters, 10/pk (closed collar)	47.67

Optional Configurations

107689	w/Xover® Two-Piece Wand Tool Kit B (107098)	$720
107690	w/ProBlade® Carpet Floor Tool Kit (107530)	720
107691	w/ProBlade Carpet and Hard Surface Floor Tool Kit (107532)	795
107692	w/15" Carpet Sidewinder® Kit A (106820)	740
107693	w/18" Carpet Sidewinder Kit B (106841)	765
107694	w/15" Carpet and Hard Surface Sidewinder Kit C (107463)	805
107695	w/Remediation Kit (107466)	785
107735	w/Xover Performance Telescoping Wand Tool Kit C (107099)	720
107751	w/Two-Piece Wand (101338) and Xover Tool (107016)	695
107752	w/Telescoping Wand (107628) and Xover Tool (107016)	700
107800	w/Hard Surface Tool & Blower Tool Kit (106986)	740

***The filtration value of ProTeam's ProLevel Filtration System in this vacuum is achieved by the use of a multi-stage filtration system, including intercept micro filter, micro cloth filter, plastic cage with foam filter, and post-motor filter made from HEPA media, as tested per ASTM F3150. Specification calculations are based on average motor performance.*

ProTeam GoFit® 6 / GoFit 6 PLUS

CERTIFIED GOLD



GoFit 6

GoFit 6 PLUS

107696* GoFit 6 w/Xover Telescoping Wand Kit D (107100)

$710

107705* GoFit 6 PLUS w/Xover Telescoping Wand Kit D (107100)

$750

ProTeam's commercial backpack vacuum products include the GoFit 6 and the GoFit 6 PLUS. Both offer unparalleled productivity and comfort experienced in the quick-adjust harness and high-level filtration. And, unique to the 6 PLUS is a filter change indicator light that shows when there's a clog or when the filter needs to be checked/changed.





ERGONOMIC

QUICK ADJUST HARNESS

FILTER INDICATOR LIGHT

*GoFit 6 PLUS Only

Specifications

Weight:	12 lbs. / 5.44 kg.
Motor Airflow:	153 CFM
Static Lift:	91 in.
Motor:	1296 W / 10.8 A
Decibel:	67.9 dBA
Capacity:	6 qt. / 6.6 L
ProLevel Filtration® w/Four Levels of Filtration:	1054 sq. in. total area

**ProLevel Filtration System with HEPA Media

Captures 99.8% at 0.3-0.5 microns per ASTM F3150

Limited Warranty

- 3 years parts, labor and motor on vacuum
- Limited lifetime on molded body parts

*Standard Configuration

- 14" Xover Floor Tool
- Telescoping Wand
- 5" Upholstery Tool
- 3" Dust Brush
- 17" Crevice Tool

Related Products

107314	Intercept Micro® Filters, 10/pk (open collar)	$22.58
107374	Intercept Micro Filters, 10/pk (closed collar)	35.86

GoFit 6 Optional Configurations

107697	w/Xover® Two-Piece Wand Tool Kit B (107098)	$710
107698	w/ProBlade® Carpet Floor Tool Kit (107530)	710
107699	w/ProBlade Carpet and Hard Surface Floor Tool Kit (107532)	785
107700	w/15" Carpet Sidewinder® Kit A (106820)	725
107701	w/18" Carpet Sidewinder Kit B (106841)	755
107702	w/15" Carpet and Hard Surface Sidewinder Kit C (107463)	795
107703	w/Remediation Kit (107466)	775
107704	w/Pest Management Tool Kit (103439)	935
107736	w/Xover Performance Telescoping Wand Tool Kit C (107099)	710
107749	w/Two-Piece Wand (101338) and Xover Tool (107016)	685
107750	w/Telescoping Wand (107628) and Xover Tool (107016)	690

GoFit 6 PLUS Optional Configurations

107706	w/Xover Two-Piece Wand Tool Kit B (107098)	$750
107707	w/ProBlade Carpet Floor Tool Kit (107530)	750
107708	w/ProBlade Carpet and Hard Surface Floor Tool Kit (107532)	825
107709	w/15" Carpet Sidewinder Kit A (106820)	770
107710	w/18" Carpet Sidewinder Kit B (106841)	795
107711	w/15" Carpet and Hard Surface Sidewinder Kit C (107463)	835
107712	w/Remediation Kit (107466)	815
107737	w/Xover Performance Telescoping Wand Tool Kit C (107099)	750

***The filtration value of ProTeam's ProLevel Filtration System in this vacuum is achieved by the use of a multi-stage filtration system, including intercept micro filter, micro cloth filter, plastic cage with foam filter, and post-motor filter made from HEPA media, as tested per ASTM F3150. Specification calculations are based on average motor performance.*

ProTeam GoFit® 3

CERTIFIED GOLD



107713* GoFit 3 w/Xover Telescoping Wand Kit D (107100)

$700

Packed with the same power and efficiency, the GoFit 3-qt delivers big power for those with a smaller frame. This cleaning solution tool is also perfect for those new to commercial backpack vacuums. And, get a customized fit with the vacuum's new quick-adjust harness, making it easy to adjust the height to personalized needs.

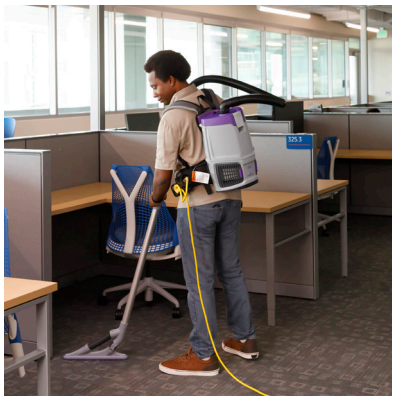



ERGONOMIC | CLEANING FOR HEALTH | EASY MAINTENANCE

Specifications

Weight:	11.4 lbs. / 5.17 kg.
Motor Airflow:	153 CFM
Static Lift:	91 in.
Motor:	1296 W / 10.8 A
Decibel:	68 dBA
Capacity:	3 qt. / 3.3 L
ProLevel Filtration® w/Four Levels of Filtration:	863.8 sq. in. total area

**ProLevel Filtration System with HEPA Media

Captures 99.8% at 0.3-0.5 microns per ASTM F3150

Limited Warranty

- 3 years parts, labor and motor on vacuum
- Limited lifetime on molded body parts

*Standard Configuration

14" Xover Floor Tool	3" Dust Brush
Telescoping Wand	17" Crevice Tool
5" Upholstery Tool	

Related Products

107666	Intercept Micro® Filters, 10/pk (open collar)	$24.67
107667	Intercept Micro Filters, 10/pk (closed collar)	33.62

GoFit 3 Optional Configurations

107714	w/Xover® Two-Piece Wand Tool Kit B (107098)	$700
107715	w/ProBlade® Carpet Floor Tool Kit (107530)	700
107716	w/ProBlade Carpet and Hard Surface Floor Tool Kit (107532)	775
107726	w/Restaurant Kit (100727)	715
107738	w/Xover Performance Telescoping Wand Tool Kit C (107099)	700
107747	w/Two-Piece Wand (101338) and Xover Tool (107016)	675
107748	w/Telescoping Wand (107628) and Xover Tool (107016)	680

***The filtration value of ProTeam's ProLevel Filtration System in this vacuum is achieved by the use of a multi-stage filtration system, including intercept micro filter, micro cloth filter, plastic cage with foam filter, and post-motor filter made from HEPA media, as tested per ASTM F3150. Specification calculations are based on average motor performance.*

NEW ProTeam GoFit® 3 Cordless

CERTIFIED SILVER

107778 GoFit 3 Cordless 8Ah w/Xover Telescoping Wand Kit D (107100) $1,790

Introducing the new GoFit 3 Cordless backpack vacuum, which offers cordless efficiency, long run times and a personalized fit. As the smallest unit engineered by ProTeam, it delivers the same high performance and suction as its larger model. The 3-quart's advanced filtration combined with the quick-adjust 4-step harness system ensures cleaning sessions are efficient and comfortable. Additionally, professional cleaners can choose to use either the 4Ah or 8Ah battery option with the GoFit 3 Cordless unit.







CORDLESS | ERGONOMIC | LONG RUN TIME

Specifications

Weight:	12.8 lbs. / 5.8 kg. (w/ 4Ah) 15.7 lbs. / 7.1 kg. (w/ 8Ah)
Motor Airflow:	65 CFM (low) | 70 CFM (high)
Static Lift:	55 in. (low) | 63 in. (high)
Motor:	54 VDC / 240 W (low) | 310 W (high)
Decibel:	63 dBA (low) | 66 dBA (high)
Capacity:	3 qt. / 3.3 L
Battery:	Lithium Ion, 4Ah / 8Ah
ProLevel Filtration® w/Three Levels of Filtration:	777 sq. in. total area
Appoximate Runtime:	4Ah Battery: 51 min. (low) | 39 min. (high) | 8Ah Battery: 106 min. (low) | 83 min. (high)
Approximate Full Charge Time:	4Ah Battery: 61 min. 8Ah Battery: 101 min.
Minimum Charge Cycles:	1000

**ProLevel Filtration System with HEPA Media

Captures 99.9% at 0.3-0.5 microns per ASTM F3150

Limited Warranty

- 3 years parts and labor, 2 years motor, battery and charger
- Limited lifetime on molded body parts

*Standard Configuration

- 14" Xover Floor Tool
- Telescoping Wand
- 5" Upholstery Tool
- 3" Dust Brush
- 17" Crevice Tool

Related Products

107666	Intercept Micro® Filters, 10/pk (open collar)	$24.67
107667	Intercept Micro Filters, 10/pk (closed collar)	33.62
107683	GoFit Cordless 4Ah Battery	727.55
107684	GoFit Cordless 8Ah Battery	1,160.32
107685	GoFit Cordless Battery Charger	450.89

Optional Configurations

107774	4Ah w/Xover® Telescoping Wand Kit D (107100)	$ 1,500
107775	4Ah w/Xover Two-Piece Wand Kit (107098)	1,500
107776	4Ah w/ProBlade® Carpet and Hard Surface Floor Tool Kit (107532)	1,575
107777	8Ah w/Aviation 1.5" Tool Kit (106502)	1,525
107779	8Ah w/Xover Two-Piece Wand Kit (107098)	1,790
107780	8Ah w/ProBlade Carpet and Hard Surface Floor Tool Kit (107532)	1,865

All vacuums purchased in kit configurations include battery and charger.

***The filtration value of ProTeam's ProLevel Filtration System in this vacuum is achieved by the use of a multi-stage filtration system, including intercept micro filter, micro cloth filter and dome filter made from HEPA media, as tested per ASTM F3150. Specification calculations are based on motor performance.*

NEW ProTeam GoFit® 6 Cordless

CERTIFIED SILVER



107786 GoFit 6 Cordless 8Ah w/Xover Telescoping Wand Kit D (107100) $1,880

The new GoFit Cordless Series includes the 6-qt. ideal for those individuals needing to tackle larger cleaning challenges, this battery-operated backpack allows individuals to work quickly and efficiently free from the restrictions of cords and power outlets. Cleaning professionals can also comfortably complete their tasks with the help of long run times and a customized quick-adjust 4-step FlexFit® harness system. Additionally, end-users can use interchangeably the 4Ah or 8Ah batteries with the GoFit 6 Cordless.





CORDLESS | ERGONOMIC | LONG RUN TIME

Specifications

Weight:	13.5 lbs. / 6.1 kg. (w/ 4Ah) 16.4 lbs. / 7.4 kg. (w/ 8Ah)
Motor Airflow:	65 CFM (low) | 70 CFM (high)
Static Lift:	55 in. (low) | 63 in. (high)
Motor:	54 VDC / 240 W (low) | 310 W (high)
Decibel:	65 dBA (low) | 67 dBA (high)
Capacity:	6 qt. / 6.6 L
Battery:	Lithium Ion, 4Ah / 8Ah
ProLevel Filtration® w/Three Levels of Filtration:	967 sq. in. total area
Appoximate Runtime:	4Ah Battery: 51 min. (low) | 39 min. (high) 8Ah Battery: 106 min. (low) | 83 min. (high)
Approximate Full Charge Time:	4Ah Battery: 61 min. 8Ah Battery: 101 min.
Minimum Charge Cycles:	1000

*Standard Configuration

- 14" Xover Floor Tool
- Telescoping Wand
- 5" Upholstery Tool
- 3" Dust Brush
- 17" Crevice Tool

**ProLevel Filtration System with HEPA Media

99.9% at 0.3-0.5 microns per ASTM F3150

Limited Warranty

- 3 years parts and labor, 2 years motor, battery and charger
- Limited lifetime on molded body parts

Related Products

107314	Intercept Micro® Filters, 10/pk (open collar)	$22.58
107374	Intercept Micro Filters, 10/pk (closed collar)	35.86
107683	GoFit Cordless 4Ah Battery	727.55
107684	GoFit Cordless 8Ah Battery	1,160.32
107685	GoFit Cordless Battery Charger	450.89

Optional Configurations

107782	4Ah w/Xover® Telescoping Wand Kit D (107100)	$1,600
107783	4Ah w/Xover Two-Piece Wand Kit (107098)	1,600
107784	4Ah w/ProBlade® Carpet and Hard Surface Floor Tool Kit (107532)	1,675
107787	8Ah w/Xover Two-Piece Wand Kit (107098)	1,880
107788	8Ah w/ProBlade Carpet and Hard Surface Floor Tool Kit (107532)	1,955
107795	8Ah w/Xover Performance Telescoping Wand Tool Kit C (107099)	1,880

All vacuums purchased in kit configurations include battery and charger.

***The filtration value of ProTeam's ProLevel Filtration System in this vacuum is achieved by the use of a multi-stage filtration system, including intercept micro filter, micro cloth filter and dome filter made from HEPA media, as tested per ASTM F3150. Specification calculations are based on motor performance.*

ProTeam GoFree® Flex Pro II

CERTIFIED BRONZE



107644* GoFree Flex Pro II 12Ah w/ Xover Telescoping Wand Tool Kit D (107100) $2,145

With a high/low power switch, the GoFree Flex Pro II brings greater versatility and options to professional cleaners. By cleaning at a rate 30% faster than a corded backpack and 5x faster than an upright vacuum, the GoFree Flex Pro II will save time and money. Eliminate safety and tripping concerns when going cordless.





CORDLESS

HIGH/LOW POWER SWITCH

LONG RUN TIME

Specifications

Weight:	17.5 lbs. / 7.9 kg.
Motor Airflow:	58 CFM (low) | 65 CFM (high)
Static Lift:	67 in. (low) | 81 in. (high)
Motor:	36 VDC / 240 W (low) | 345 W (high)
Decibel:	63.9 dBA (low) | 65.9 dBA (high)
Capacity:	6 qt. / 6.6 L
Battery:	Lithium Ion, 12Ah
ProLevel Filtration® w/Four Levels of Filtration:	1054 sq. in.total area
Appoximate Runtime:	106 mins. (low) | 75 mins. (high)
Approximate Full Charge Time:	3 hrs.
Minimum Charge Cycles:	1000

**ProLevel Filtration System with HEPA Media

Captures 99.7% at 0.3-0.5 microns per ASTM F3150

Limited Warranty

- 3 years parts and labor, 2 years motor, battery and charger
- Limited lifetime on molded body parts

*Standard Configuration

- 14" Xover Floor Tool
- Telescoping Wand
- 5" Upholstery Tool
- 3" Dust Brush
- 17" Crevice Tool

Related Products

107314	Intercept Micro® Filters, 10/pk (open collar)	$22.58
107374	Intercept Micro Filters, 10/pk (closed collar)	35.86
107724	12Ah Replacement Battery	1,501.52
107516	Battery Charger	378.49

Optional Configurations

107645	12Ah w/ProBlade® Carpet and Hard Surface Floor Tool Kit (107532)	$2,210
107650	12Ah w/Xover Two-Piece Wand Tool Kit B (107098)	2,145
107681	12Ah w/Xover Telescoping Wand Kit and 101613 Tool (107100)	2,245
107796	12Ah w/Xover Performance Telescoping Wand Kit (107099)	2,145

All vacuums purchased in kit configurations include battery and charger.

***The filtration value of ProTeam's ProLevel Filtration System in this vacuum is achieved by the use of a multi-stage filtration system, including intercept micro filter, micro cloth filter, plastic cage with foam filter, and post-motor filter made from HEPA media, as tested per ASTM F3150. Specification calculations are based on average motor performance.*

ProTeam Super Coach Pro® 10

CERTIFIED GOLD



107303* Super Coach Pro 10 w/ Xover Telescoping Wand Tool Kit D (107100)

$735

A productive large capacity triangular shape vacuum combined with ProTeam's innovative articulating harness provides a backpack vacuum that feels more like a part of your body providing comfort and cleaning with ease. The weight of the backpack is distributed to the natural center of gravity, so you have better balance no matter how you move.







ERGONOMIC



LARGE CAPACITY



SAVES TIME

Specifications

Weight:	12.5 lbs. / 5.67 kg.
Motor Airflow:	153 CFM
Static Lift:	91 in.
Motor:	1296 W / 10.8 A
Decibel:	69.7 dBA
Capacity:	10 qt. / 11 L
ProLevel Filtration® w/Four Levels of Filtration:	1372 sq. in. total area

**ProLevel Filtration System with HEPA Media

Captures 99.8% at 0.3-0.5 microns per ASTM F3150

Limited Warranty

- 3 years parts, labor and motor on vacuum
- Limited lifetime on molded body parts

*Standard Configuration

- 14" Xover Floor Tool
- Telescoping Wand
- 5" Upholstery Tool
- 3" Dust Brush
- 17" Crevice Tool

Related Products

107313	Intercept Micro® Filters, 10/pk (open collar)	$34.27
107680	Intercept Micro Filters, 10/pk (closed collar)	47.67

***The filtration value of ProTeam's ProLevel Filtration System in this vacuum is achieved by the use of a multi-stage filtration system, including intercept micro filter, micro cloth filter, plastic cage with foam filter, and post-motor filter made from HEPA media, as tested per ASTM F3150. Specification calculations are based on average motor performance.*

Optional Configurations

107304	w/Xover® Two-Piece Wand Tool Kit B (107098)	$735
107305	w/Xover Performance Telescoping Wand Tool Kit C (107099)	735
107306	w/Hard Surface Flooring Kit A (101829)	755
107338	w/Hard Surface Flooring Kit B (107336)	755
107339	w/Hard Surface Flooring Kit C (105889)	755
107340	w/15" Carpet Sidewinder® Kit A (106820)	755
107341	w/18" Carpet Sidewinder Kit B (106841)	780
107342	w/Hard Surface Flooring Kit D (105891)	755
107465	w/Carpet and Hard Surface Sidewinder Kit C (107463)	820
107468	w/Remediation Kit (107466)	800
107536	w/ProBlade® Carpet Floor Tool Kit (107530)	735
107537	w/ProBlade Hard Surface Floor Tool Kit (107531)	755
107538	w/ProBlade Carpet and Hard Surface Floor Tool Kit (107532)	810
107744	w/Two-Piece Wand (101338) and Xover Tool (107016)	710
107745	w/Telescoping Wand (107628) and Xover Tool (107016)	715

ProTeam Super Coach Pro® 6

CERTIFIED GOLD

107310* Super Coach Pro 6 w/ Xover Telescoping Wand Tool Kit D (107100)

$725

The Super Coach Pro 6 commercial backpack vacuum delivers unsurpassed power in an ergonomic, lightweight and comfortable frame. With a smaller footprint, it's easy to maneuver in tight spaces. Easy access post motor filter made from HEPA Media captures and contains microscopic particulates and carbon dust.





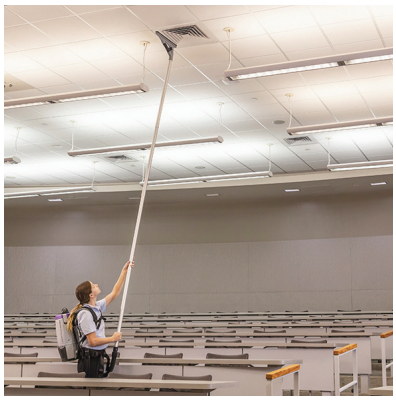

CLEANING FOR HEALTH

COST OF OWNERSHIP

SAVES TIME

Specifications

Weight:	11.8 lbs. / 5.35 kg.
Motor Airflow:	153 CFM
Static Lift:	91 in.
Motor:	1296 W / 10.8 A
Decibel:	69.7 dBA
Capacity:	6 qt. / 6.6 L
ProLevel Filtration® w/Four Levels of Filtration:	1054 sq. in. total area

**ProLevel Filtration System with HEPA Media

Captures 99.6% at 0.3-0.5 microns per ASTM F3150

Limited Warranty

- 3 years parts, labor and motor on vacuum
- Limited lifetime on molded body parts

*Standard Configuration

14" Xover Floor Tool	3" Dust Brush
Telescoping Wand	17" Crevice Tool
5" Upholstery Tool	

Related Products

107314	Intercept Micro® Filters, 10/pk (open collar)	$22.58
107374	Intercept Micro Filters, 10/pk (closed collar)	35.86

***The filtration value of ProTeam's ProLevel Filtration System in this vacuum is achieved by the use of a multi-stage filtration system, including intercept micro filter, micro cloth filter, plastic cage with foam filter, and post-motor filter made from HEPA media, as tested per ASTM F3150. Specification calculations are based on average motor performance.*

Optional Configurations

107308	w/Xover® Two-Piece Tool Kit B (107098)	$725
107307	w/Xover Performance Telescoping Wand Tool Kit C (107099)	725
107309	w/Hard Surface Floor Kit A (101829)	745
107343	w/15" Carpet Sidewinder® Kit A (106820)	745
107344	w/18" Carpet Sidewinder Kit B (106841)	770
107371	w/Pest Control Kit (103439)	950
107464	w/Carpet and Hard Surface Sidewinder Kit C (107463)	810
107467	w/Remediation Kit (107466)	790
107497	w/Xover Kit (107100), 20" Tool & Vac Station	865
107533	w/ProBlade® Carpet Floor Tool Kit (107530)	725
107534	w/ProBlade Hard Surface Floor Tool Kit (107531)	755
107535	w/ProBlade Carpet and Hard Surface Floor Tool Kit (107532)	800
107742	w/Two-Piece Wand (101338) and Xover Tool (107016)	700
107743	w/Telescoping Wand (107628) and Xover Tool (107016)	705

ProTeam ProGen® 12 / 15

CERTIFIED SILVER

107329 ProGen 12 $840
107330 ProGen 15 $940

The ProGen 12/15 has the added performance and features to make it an instant hit with cleaning professionals. Choose 12" or 15" width for productivity in a variety of applications. The increased maneuverability, animated dashboard display and patented Snap Lock Lid make this an upright like no other.

Ergonomic lightweight handle provides comfortable operation while the quick change cord feature and the user's ability to reach clogs in four easy access points provide quick and easy maintenance.







EASY TO USE

LAYS FLAT

2lbs.
HANDLE WEIGHT

Specifications

Weight: **ProGen 12**: 17 lbs. / 7.71 kg. | **ProGen 15**: 18 lbs. / 8.17 kg.	
Handle Weight:	2.7 lbs. / 1.22 kg.
Motor Airflow:	100 CFM
Static Lift:	93 in.
Motor:	1100 W / 9.8 A
Decibel:	69 dBA
Capacity:	3.25 qt. / 3 L
ProLevel Filtration® w/Three Levels of Filtration:	236 sq. in. total area
Cord length: **ProGen 12**: 40' | **ProGen 15**: 50'	

*ProLevel Filtration System with HEPA Media

- **ProGen 12:** captures 97.4% at 0.3-0.5 microns per ASTM F3150
- **ProGen 15:** captures 98.3% at 0.3-0.5 microns per ASTM F3150

Limited Warranty

- 3 years parts, labor, motor and molded body parts (except for wear items)

Related Products

107377	Intercept Micro® Filters, 10/pk	$32.60

**The filtration value of ProTeam's ProLevel Filtration® System in this vacuum is achieved by the use of a multi-stage filtration system, including intercept micro filter, foam filter, and post-motor filter made from HEPA Media, as tested per ASTM F3150.*

ProTeam ProForce® 1200XP / 1500XP

CERTIFIED BRONZE

107251 ProForce 1200XP $852
107252 ProForce 1500XP $953



Our top-of-the-line ProForce uprights have evolved into superior cleaning machines. The ProForce 15" uprights provide exceptional cleaning in a high-filtration upright to improve reach, durability, and Indoor Air Quality. The dual motor system and exhaust filters made from HEPA Media maximize efficiency and effectiveness. The powerful ProForce contains a high-performance dual-motor system and a low profile, L-shaped head perfect for vacuuming under and around furniture.

ProForce 1500XP and ProForce 1200XP models are equipped with premium quality on-board tools including a lightweight plastic wand with a super stretch-hose.

The ProForce 1200XP is designed for advanced versatility allowing the 12" powerhead to reach even smaller spaces.





HIGH PILE

INDOOR AIR QUALITY

LAYS FLAT

Specifications

Weight:	18 lbs. / 8.17 kg.
Handle Weight:	4.7 lbs. / 2.13 kg.
Motor Airflow:	96 CFM
Static Lift:	84 in.
Motor:	924 W Dual Motor / 10 A
Decibel:	67 dBA
Capacity:	3.25 qt. / 3 L
ProLevel Filtration® w/Three Levels of Filtration:	522 sq. in. total media

Related Products

103483	Intercept Micro® Filters, 10/pk	$25.69

*ProLevel Filtration System with HEPA Media

- **ProForce 1200XP**: captures 97.3% at 0.3-0.5 microns per ASTM F3150
- **ProForce 1500XP**: captures 98.7% at 0.3-0.5 microns per ASTM F3150

Limited Warranty

- 3 years parts, labor, motor and molded body parts (except for wear items)
- 2 years on ProForce brush roll motor (104506)

**The filtration value of ProTeam's ProLevel Filtration® System in this vacuum is achieved by the use of a multi-stage filtration system, including intercept micro filter, foam filter, and post-motor filter made from HEPA Media, as tested per ASTM F3150.*

ProTeam GoFit® 6 HEPA

CERTIFIED GOLD

107766 GoFit 6 HEPA w/ Remediation Tool Kit (107466)

$915



The GoFit 6 HEPA backpack vacuum is ProTeam's most advanced filtration system. The HEPA vacuum is engineered to capture 99.97% of particulates as small as 0.3 microns inside a sealed filter that can trap dust and microscopic atmospheric hazards like mold spores, lead dust, smoke, or other particulates. The GoFit 6 HEPA is ideal for remediation, lead-safe abatement (RRP), and improving indoor air quality in hospitals, clinics, and patient care spaces.





HEPA | INDOOR AIR QUALITY | PERFORMANCE

Specifications

Weight:	13.3 lbs. / 6.03 kg.
Motor Airflow:	124 CFM
Static Lift:	75 in.
Motor:	780 W / 6.5 A / 120 V
Decibel:	63 dBA
Capacity:	6 qt. 6.6 L
Four Level® Filtration w/HEPA:	1756 sq. in. total area

HEPA Filtration

- **HEPA:** 99.97% at 0.3 microns per ASTM F3150

Limited Warranty

- 3 years parts, labor and motor on vacuum
- Limited lifetime on molded body parts

*Standard Configuration

Two-Piece Aluminum Wand w/Button Lock	5" Upholstery Tool
36" One-Bend Bulk Pick-Up Tool	3" Dust Brush
14" Carpet Tool w/Scallops	
14" Hard Floor Tool w/ Nylon Brush	

Optional Configurations

107767	HEPA w/Xover® Performance Telescoping Wand Tool Kit C (107099)	$850

Related Products

107314	Intercept Micro® Filters, 10/pk (open collar)	$22.58
107374	Intercept Micro Filters, 10/pk (closed collar)	35.86
847761	HEPA Filter	313.60

Specification calculations are based on average motor performance.

**The ProTeam GoFit 6 HEPA and HEPA filter configuration may be used to remove certain hazardous materials, such as mold and lead. When using the GoFit 6 HEPA vacuum cleaner to remove hazardous materials, consult your applicable regulatory agencies for additional requirements.*

ProTeam ProVac® FS 6

107363* ProVac FS 6 w/Restaurant Tool Kit (100727)

$750



The ProVac FS 6 is designed specifically to triumph over the demands of the foodservice and hospitality industry. The unit is virtually indestructible – without belts, beater bars or brushes. The ProVac FS 6 rises to any foodservice challenge.





ERGONOMIC | CLEANING FOR HEALTH | EASY MAINTENANCE

Specifications

Weight:	11.8 lbs. / 5.35 kg.
Motor Airflow:	153 CFM
Static Lift:	91 in.
Motor:	1296 W / 10.8 A
Decibel:	69.7 dBA
Capacity:	6 qt. / 6.6 L
ProLevel Filtration® w/Four Levels of Filtration:	1054 sq. in. total area

**ProLevel Filtration System with HEPA Media

Captures 99.6% at 0.3-0.5 microns per ASTM F3150

Limited Warranty

- 3 years parts, labor and motor on vacuum
- Limited lifetime on molded body parts

*Standard Configuration

- 14" Hard Floor Tool w/Nylon Brush
- Two-Piece Aluminum Wand w/Button Lock
- 10-pack Intercept Micro Filters
- Extra Micro Cloth Filter
- 14" Carpet Tool w/ Scallops
- 5" Upholstery Tool
- 3" Dust Brush
- 11" Crevice Tool

Optional Configurations

107613	w/ProBlade® Carpet and Hard Surface Floor Tool Kit (107532)	$820

Related Products

107314	Intercept Micro® Filters, 10/pk (open collar)	$22.58
107374	Intercept Micro Filters, 10/pk (closed collar)	35.86

***The filtration value of ProTeam's ProLevel Filtration System in this vacuum is achieved by the use of a multi-stage filtration system, including intercept micro filter, micro cloth filter, plastic cage with foam filter, and post-motor filter made from HEPA media, as tested per ASTM F3150. Specification calculations are based on average motor performance.*

ProTeam ProBlitz®

107132 ProBlitz **$380**
107596 ProBlitz XP **$455**

ProBlitz XP now features daisy chain receptacles where user can connect 2 additional air movers for large area drying. Maximum airflow and low amp draw combine to make the ProBlitz AirMover the first choice for Carpet Cleaners and Restoration Contractors alike. With 3 fan speeds and 3 operating positions, the ProBlitz AirMover tackles every air circulation requirement with ease.









**ProBlitz XP AirMover shown.*

Specifications

Motor:	.4 HP / 360 Watt / Capacitor	
Amperage:	Low	2.4 A
	Medium	2.7 A
	High	3.0 A
Motor Airflow:	2200 CFM (max)	
Weight:	28 lbs. / 12.7 kg.	
Decibel:	Low	63 dBA
	Medium	65 dBA
	High	66 dBA
Housing:	2-Piece High-Impact Polypropylene w/Built-in Cord Wrap	
Storage:	Vertically stackable and top-mounted carry handle	
Blower Wheel:	High-Impact Polypropylene	
Drying Positions:	Three - 0°, 45° / 60° (XP model only), 90°	
Transportation:	Telescoping handle and wheels (XP model only)	
Power Cord:	ProBlitz - 30' ProBlitz XP - 25'	
Circuit Breaker:	8 amp max (XP model only)	

Related Products

107300	Carpet Clamp Kit	$99.41

Specification calculations are based on average motor performance.

Limited Warranty

- 3 years parts, labor and motor on vacuum
- Limited lifetime on molded housing

ProTeam ProGuard® 4 Portable

107128 ProGuard 4 Portable w/4 Gallon Tool Kit (107184)

$350



Power and versatility come together in the portable ProGuard 4 Wet / Dry Vacuum. For emergency spills, detail cleaning and portable jobsite maintenance, there's no better choice for true wet / dry vacuum performance in an easy-to-carry package.





Specifications

Motor:	1080 W / 9.0 A
Motor Airflow:	142 CFM
Static Lift:	51"
Tank Size:	4 gallon / 15.2 L
Weight:	12 lbs. / 5.5 kg.
Decibel:	76 dBA
Fine Dust Cartridge Filter:	903 sq. in.
Power Cord:	20', 18 AWG

Standard Configuration

- 10' Vacuum Hose
- Two-Piece Wand
- Master Floor Tool
- Carpet Insert
- Hard Surface Insert
- Squeegee Insert
- Crevice Tool
- Dust Brush
- Claw Nozzle

Related Products

107182 Intercept Micro® Filters, 3/pk	$29.67
107178 Qwik Lock Fine Dust Cartridge Filter	28.61

Recommended Applications

- Emergency Spills
- Flooding
- Spot Cleaningg
- Day porters
- Jobsite Maintenance

Limited Warranty

- 3 years on parts and labor
- 1 year on vacuum motor
- Limited lifetime on molded body parts

Specification calculations are based on average motor performance.

ProTeam ProGuard® 10



107129 ProGuard 10 w/ Wet / Dry Tool Kit (107187)

$710

The ProGuard 10 Wet / Dry Vacuum offers durable construction and powerful performance. With a heavy duty, 2-stage motor and commercial grade tools and hose, the ProGuard 10 will keep working even in the toughest environments.







ProTeam ProGuard® 16 MD

107386 ProGuard 16 MD w/Wet / Dry Tool Kit (107187)

$700

ProTeam's ProGuard 16 MD Wet / Dry Vacuum is an excellent tool for smaller challenges like weather-related messes or bigger ones like capturing dust and debris at construction sites. And, its compact size, removable handle and convenient tool bag allow for easy storage and efficient performance.





Specifications

Motor Airflow:	105 CFM
Static Lift:	95"
Motor:	1380 W / 9.5 A
ProGuard Filter:	Polypropylene Screen
Fine Dust Cartridge Filter:	1142 sq. in.
Power Cord:	50', 14 AWG

	ProGuard 10	ProGuard 16
Weight:	28 lbs. / 12.7 kg.	29 lbs. / 13.2kg.
Decibel:	68 dBA	66 dBA
Tank size:	10 gallon / 38 L	16 gallon / 60.6 L

Standard Configuration

- 10' Vacuum Hose
- Two-Piece Wand
- Nylon Floor Tool
- Carpet Insert
- Squeegee Insert
- Crevice Tool
- Dust Brush

Limited Warranty

- 3 years parts, labor and motor on vacuum
- Limited lifetime on molded body parts

Related Products

107181	ProGuard 10 Intercept Micro® Filters, 3/pk	$40.09
107177	Qwik Lock Wet Filter	38.16
107175	Qwik Lock Fine Dust Cartridge Filter	38.16
107176	Qwik Lock Filter made from HEPA Media	47.71

Recommended Applications

- Retail
- Emergency/Floor Cleaning
- Hard Floor/Refinishing
- Manufacturing

Specification calculations are based on average motor performance.

ProTeam ProGuard® 15 / 20





ProGuard 15 Shown without Front Mount Squeegee.

107359 ProGuard 15 w/107187 Tool Kit & Front Mount Squeegee **$1,285**

107360 ProGuard 20 w/107187 Tool Kit & Front Mount Squeegee **$1,350**

The ProGuard 15/20 Wet / Dry Vacuums deliver high-powered performance and durability, including intuitive features that make it easier and more convenient to use. These units can help cleaning professionals respond quickly to any challenge big or small. An optional front mount squeegee system saves time, money and energy when stripping floors. Patented wheel configuration allows for increased maneuverability.





Specifications

Motor Airflow:	105 CFM
Static Lift:	95"
Motor:	1380 W / 9.5 A
Decibel:	69 dBA
ProGuard Filter:	Polypropylene Screen
Fine Dust Cartridge Filter:	1142 sq. in.
Power Cord:	50', 14 AWG

	15	20
Weight:	68 lbs. / 31 kg.	70 lbs. / 32 kg.
Tank size:	15 gallon / 57 L	20 gallon / 76 L

Limited Warranty

- 3 years parts, labor and motor on vacuum
- Limited lifetime on molded body parts

*Standard Configuration

10' Vacuum Hose	Squeegee Tool
Two-Piece Wand	Crevice Tool
Nylon Floor Tool	Dust Brush

Related Products

107180	Intercept Micro® Filters, 3/pk	$58.20
107177	Qwik Lock Wet Filter	38.16
107175	Qwik Lock Fine Dust Cartridge Filter	38.16
107176	Qwik Lock Filter made from HEPA Media	47.71

Optional Configurations

107131	ProGuard 20 w/Wet/Dry Tool Kit (107187) (no front mount squeegee)	$1,110.00
107130	ProGuard 15 w/Wet/Dry Tool Kit (107187) (no front mount squeegee)	1,040.00
107185	Front Mount Squeegee	377.44

Specification calculations are based on average motor performance.

14" Xover® Floor Tool 1½" Tool Kits

Part No.	Description	List Price
A. 107097	14" Xover Performance Floor Tool (107015), Two-Piece Wand Kit (101338)	$177.51
B. 107098	14" Xover Floor Tool (107016), Two-Piece Wand Kit (101338)	177.51
C. 107099	14" Xover Performance Floor Tool (107015), Telescoping Wand Kit (107628)	163.75
D. 107100	14" Xover Floor Tool (107016), Telescoping Wand Kit (107628)	163.75

Each kit contains:

100108 17" Crevice Tool
100110 3" Dust Brush
100115 5" Upholstery Tool

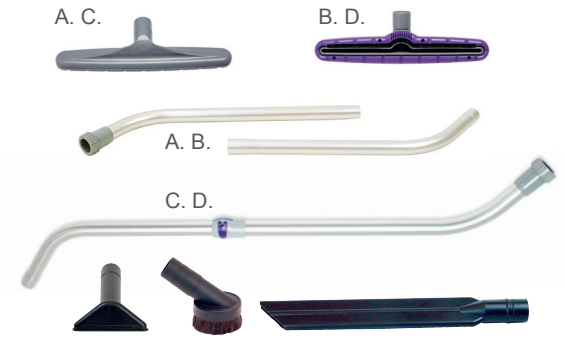

Carpet Two-Piece 1½" Wand Tool Kit

Part No.	Description	List Price
100078	14" Floor Tool w/Scallops (100147)	$133.46

Each kit contains:

101338 56" Two-Piece, Two-Bend Aluminum Wand w/Button Lock
100108 17" Crevice Tool
100110 3" Dust Brush
100115 5" Upholstery Tool



14" Xover Floor Tool Basic Kits

Part No.	Description	List Price
107753	Telescoping Wand (107628) & Xover Floor Tool (107016)	137.50
107754	Two-Piece Wand (101338) and Xover Floor Tool Kit (107016)	158.68

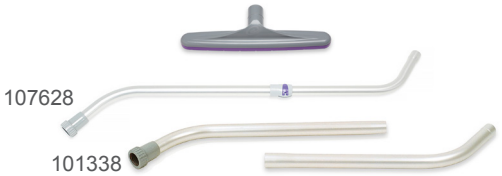

Hard Surface Two-Piece 1½" Wand Tool Kits

Part No.	Description	List Price
A. 101829	Hard Surface Tool w/Scalloped & Flat Felt Brush (106194)	$223.28
B. 107336	Hard Surface Tool w/Nylon Brush (100623)	203.49
C. 105889	Hard Surface Tool w/Scalloped Felt Brush (100144)	203.49
D. 105891	Hard Surface Tool w/Nylon & Horse Hair Blend Brush (100614)	203.49

Each kit contains:

101338 56" Two-Piece, Two-Bend Aluminum Wand w/Button Lock
100109PT 28" Crevice Tool
100110 3" Dust Brush

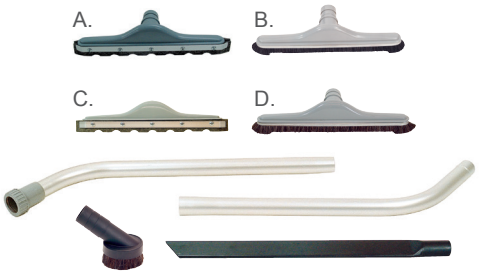

Pest Management 1¼" Tool Kit

Part No.	Description	List Price
103439	Pest Management Tool Kit	$369.45

Each kit contains:

102361 17" Straight Plastic Wand
102399 Vibrating Upholstery Tool
102663 Mesh Bag
102684 Electronic Cleaning Kit
103089 2½" Dust Brush
103099 1¼" Adapter Cuff
103505 13" Curved Chrome Wand
103523 24" Crevice Tool (Flexi-Clean)
106343 24" to 40" Chrome Telescoping Wand w/But
106709 10" Multi-Surface Floor Tool

NOTE: Extra 10-pack Intercept Micro Filters included with purchase of SCP 6 (107371) with Integrated Pest Management (IPM) kit.



Turbo Brush 1¼" Tool Kit

Part No.	Description	List Price
100135	Turbo Brush with Wand	$206.96

Each kit contains:

100117 11" Turbo Brush Tool
100136 54" One-Bend Chrome Tapered Wand



Remediation 1½" Tool Kit

Part No.	Description	List Price
107466	Remediation Tool Kit	$219.85

Each kit contains:

101338 56" Two-Piece, Two-Bend Aluminum Wand w/Button Lock
100110 3" Dust Brush
100115 5" Upholstery Tool
100150 36" One-Bend Bulk Pick-Up Tool
100147 14" Carpet Tool w/Scallops
100623 14" Hard Floor Tool w/Nylon Brush



Restaurant 1½" Tool Kit

Part No.	Description	List Price
100727	Restaurant Tool Kit	$177.82

Each kit contains:

101338 56" Two-Piece, Two-Bend Aluminum Wand w/Button Lock
100147 14" Carpet Tool w/Scallops
100110 3" Dust Brush
100115 5" Upholstery Tool
100107PT 11" Crevice Tool
100623 14" Hard Floor Tool w/Nylon Brush

Note: Extra 10-pack Intercept Micro Filters, extra cloth filter included with purchase of ProVac FS 6 (107363) with Restaurant Kit.

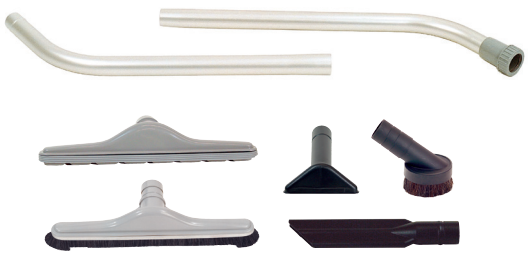

Aviation 1½" Tool Kit

Part No.	Description	List Price
106502	Aviation Tool Kit	$238.90

Each kit contains:

100110 3" Dust Brush
100108 17" Crevice Tool
101338 56" Two-Piece, Two-Bend Aluminum Wand w/ Button Lock
100115 5" Upholstery Tool
100155 12" Aluminum Gulper Floor Tool



Multi-Surface 1¼" Tool Kits

Part No.	Description	List Price
A. 104885	10" Multi-Surface Floor Tool (106709)	$126.03
B. 107290	Xover Performance Floor Tool w/1¼" Connection (107291)	200.67

Each kit contains:

106343 24" to 40" Chrome Telescoping Wand w/Button Lock
103086 13" Crevice Tool
103087 5½" Upholstery Tool w/Removable Brush (103088)
103089 2½" Dust Brush, Rectangular 90/180° Swivel

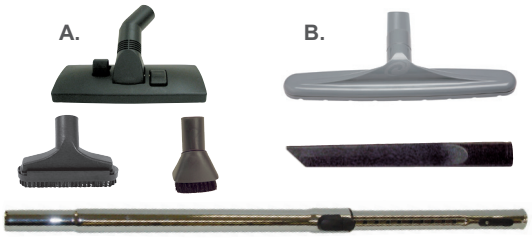

Sidewinder 1½" Tool Kits

Part No.	Description	List Price
A. 106820	15" Carpet Sidewinder Tool (106245)	$209.23
B. 106841	18" Carpet Sidewinder Tool (105691)	228.25
C. 107463	15" Carpet Sidewinder Tool (106245) and 15" Hard Surface Sidewinder Tool (106246)	304.30

Each kit contains:

105693 59" Two-Piece Friction-Fit Straight Aluminum Wand
100108 17" Crevice Tool
100110 3" Dust Brush
100115 5" Upholstery Tool

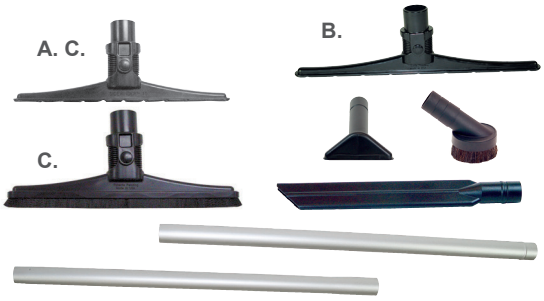

ProBlade 1½" Tool Kits

Part No.	Description	List Price
A. 107530	ProBlade Carpet Tool (107527)	$159.21
B. 107531	ProBlade Hard Surface Tool (107528)	174.35
C. 107532	ProBlade Carpet Tool (107527) and ProBlade Hard Surface Tool (107528)	235.00

Each kit contains:

107529 Telescoping Wand
100108 17" Crevice Tool
100110 3" Dust Brush
100115 5" Upholstery Tool
103122 Cuff Adapter

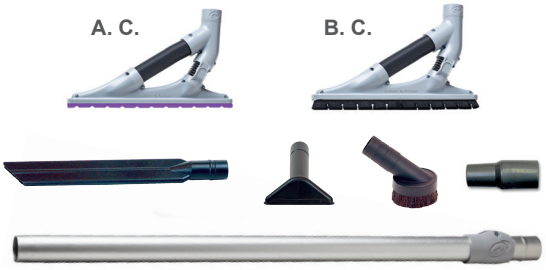

High Dusting 1½" Tool Kits

Part No.	Description	List Price
A. 107598	Straight Wand High Dusting Kit (includes: 1-3)	$172.48
B. 107599	High Dusting Kit w/ProBlade Hard Surface Tool (includes 1-4)	241.62
C. 107600	High Dusting Curved Wand Kit (includes: 5-7)	140.83
D. 107601	Deluxe Straight and Curved Wand High Dusting Kit (includes: 1-7)	339.18

Kits contains:

1. Mesh Storage Bag (not sold separately)
2. Three-Piece Straight Friction Fit Aluminum Wands (not sold separately)
3. Straight Friction Fit Aluminum Wand with Hose Connection Ridge (not sold separately)
4. ProBlade Hard Surface Floor Tool (107528)
5. 45˚ Bend Wand (not sold separately)
6. 135˚ Bend Wand (not sold separately)
7. Wand Adapter (842300)

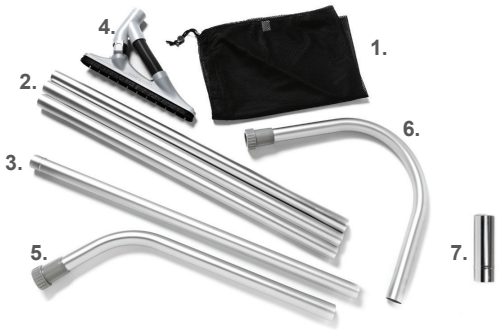

1½" Blower Tool Kits

Part No.	Description	List Price
A. 106986	Hard Surface Tool w/Nylon & Horse Hair Blend Brush (100614)	$201.67
B. 107337	Hard Surface Tool w/Nylon Brush (100623)	177.51



Each kit contains:

101338	56" Two-Piece, Two-Bend Aluminum Wand w/Button Lock
100108	17" Crevice Tool
100110	3" Dust Brush
106993	Blower Tool



ProGuard 10/15/16/20 Wet/Dry 1½" Tool Kit

Part No.	Description	List Price
107187	ProGuard 10/15/16/20 1½" Tool Kit	$277.59

Each kit contains:

101338	56" Two-Piece, Two-Bend Aluminum Wand w/Button Lock
107199	Squeegee Tool
100623	Nylon Brush Floor Tool
100107PT	Crevice Tool
100110	Dust Brush

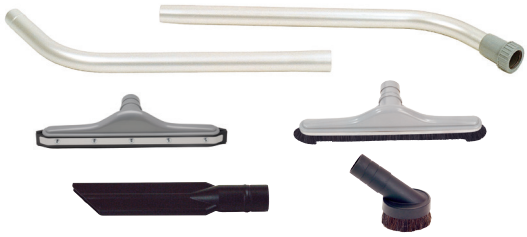

ProGuard 4 Portable Wet/Dry Tool Kit

Part No.	Description	List Price
107184	ProGuard 4 Tool Kit	$138.51

Each kit contains:

102266	Two-Piece, One-Bend, Friction-Fit Wand	107193	Squeegee Insert
107189	Master Floor Tool	107194	Crevice Tool
107191	Carpet Insert	107195	Dust Brush
107192	Floor Brush Insert	107196	Claw Nozzle



Wands

	No.	Product Name	Size	List Price
A.	**103505**	13" Curved Chrome Wand w/Button Lock	1¼"	$32.26
	100167	13" Curved Chrome Wand (Not Shown)	1¼"	33.76
B.	**100104**	60" Straight Extension* Aluminum Wand	1½"	96.21
C.	**100102**	56" One-Piece, Two-Bend Aluminum Wand*	1½"	95.77
D.	**101338**	56" Two-Piece, Two-Bend Aluminum Wand w/Button Lock*	1½"	101.61
E.	**100136**	54" One-Bend Chrome Tapered Wand for 1¼" Turbo Brush (100117)	1½" - 1¼"	68.44
F.	**106343**	24" to 40" Chrome Telescoping Wand w/Button Lock (for electrified hose as pump handle connection)	1¼"	56.21
G.	**105693**	59" Two-Piece Friction-Fit Aluminum Sidewinder Straight Wand	1½"	99.92
H.	**105695**	59" One-Piece Friction-Fit Aluminum Sidewinder Straight Wand	1½"	92.89
I.	**102266**	54" Two-Piece Friction-Fit One Bend Aluminum Wand with Button Lock	1½"	94.48
J.	**106293**	49" One-Piece, Two-Bend Aluminum Wand w/Aluminum Coupling	1½"	95.00
K.	**107188**	25" Ext. Handle Curved	1½"	54.82
L.	**107190**	25" Ext. Handle Straight	1½"	49.25
M.	**107529**	32" to 57" Telescoping Straight Friction-Fit Wand (flip-lock)	1½"	101.60
N.	**107628**	42" to 57" Two-Piece, Two-Bend Telescoping Wand (flip-lock)	1½"	147.88

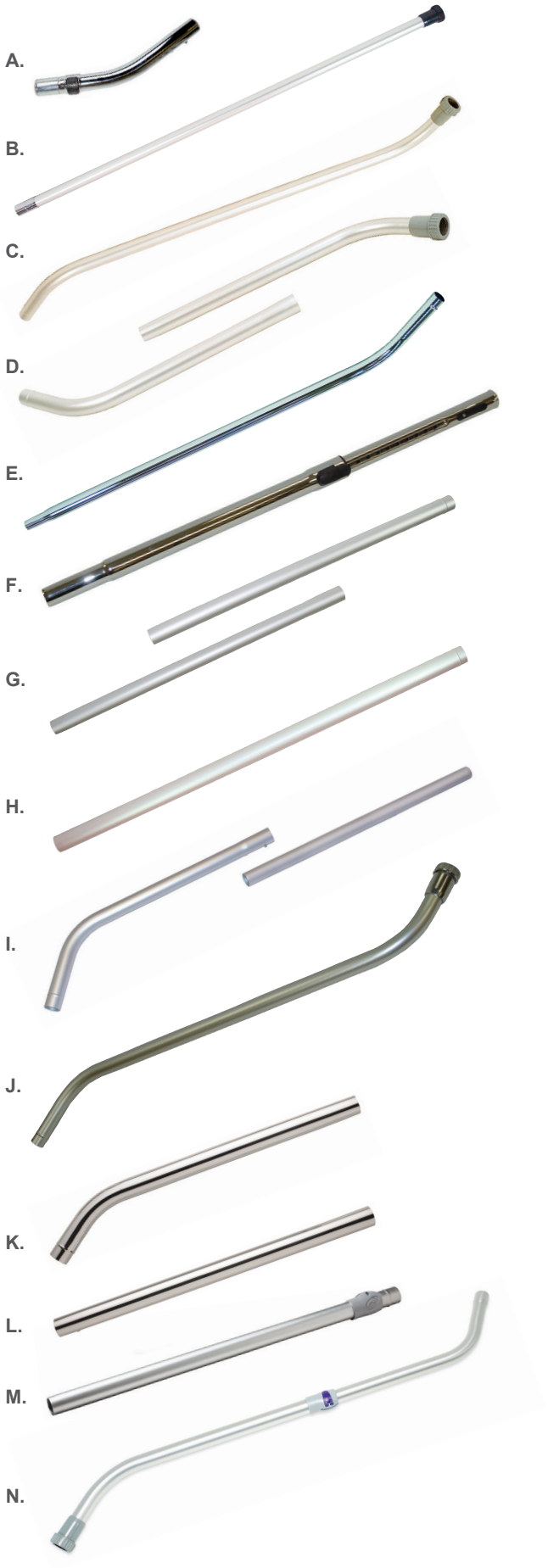

**Wands come complete with tool couplings*

Multi-Surface Floor Tools

Part No.	Product Name	Wand Diameter	Length	List Price	
107016	**Xover® Floor Tool** Ideal use: commercial, medium pile carpet and durable flooring. Improved suction performance and design for ease of use.	1½"	14"	$71.58	
107015	**Xover® Performance Floor Tool** Ideal use: commercial, medium pile carpet and durable flooring. Provides better performance of soil removal due to the agitation of the carpet. The GoFit, with Xover Performance Tool reaches Gold Seal of Approval Rating with the Carpet and Rug Institute.	1½"	14"	94.37	
106709	**Multi-Surface Floor Tool** Ideal use: low pile carpet and hard surfaces. Lever on top of tool lowers brush and duster strip hard surfaces. Use with Friction-Fit wand 106343 or 100136.	1¼"	10.75"	41.83	

Carpet Floor Tools

Part No.	Product Name	Wand Diameter	Length	List Price	
100117	**Turbo Brush** Ideal use: medium to high pile carpeting. Only use with Friction-Fit and wand 106343 or 100136.	1¼"	11"	$138.00	
103085	**Floor Tool w/Scallops** Ideal use: low to medium pile carpeting. Only use with Friction-Fit wand 106343 or 100136.	1¼"	12"	41.23	
100730	**Paddle Tool** Ideal use: hard-to-reach areas on airplanes, under seats, desks, pews, stadium seats, etc	1½"	12"	43.03	
103608	**Turbo Brush** Ideal use: medium to high pile carpeting. Only with Friction-Fit wand 102266.	1½"	11"	138.00	
100083	**Floor Tool w/Adjustable Nylon Brush** Ideal use: medium pile and Berber carpet.	1½"	11"	62.70	
100147	**Floor Tool w/Scallops** Ideal use: low to medium pile carpeting.	1½"	14"	50.18	
106245	**15" Sidewinder® Carpet Tool** Ideal use: along baseboards and crevices on low pile carpet. Only use with wand 105693 or 105695.	1½"	15"	76.21	
105691	**18" Sidewinder® Carpet Tool** Ideal use: along baseboards and crevices on low pile carpet. Only use with wand 105693 or 105695.	1½"	18"	88.55	
100092PT	**Floor Tool w/Adjustable Nylon Brush** Ideal use: medium pile and Berber carpet. Efficient for larger areas.	1½"	16"	68.08	
100155	**Gulper Aluminum Floor Tool** Ideal use: low pile and hard surfaces. Best for large debris. Only use with wand 106293.	1½"	12"	68.16	
836357	**Turbo Brush** Ideal use: medium to high pile carpeting and walk off mats.	1½"	11"	127.32	
107527	**ProBlade Carpet Floor Tool** Ideal use: low to medium pile carpeting, along baseboards and crevices. Use only with wand 107529.	1½"	14"	60.65	

Hard Surface Floor Tools

Part No.	Product Name	Wand Diameter	Length	List Price	
103084	**Natural Fiber Hard Floor Tool** Ideal use: tile, marble, vinyl, linoleum, wood. Best for floors without a high gloss finish. Only use with Friction-Fit wand 106343 or 100136.	1¼"	12"	$46.58	
100144	**Floor Tool w/Scalloped Felt Brush** Ideal use: floors with delicate or high polished finishes. Also for use on polyethylene barrier/visqueen when cleaning the plastic hung in work areas adhering to the EPA's RRP guidelines.	1½"	14"	71.67	
100623	**Hard Floor Tool w/Nylon Brush** Ideal use: tile, marble, vinyl, linoleum, wood. Best for floors without a high gloss finish. Also used with ProGuard Wet/Dry Vacuums 10/15/16/20.	1½"	14"	89.90	
100614	**Hard Floor Tool w/Nylon & Horse Hair Blend Brush** Ideal use: with floors with high gloss finish.	1½"	14"	77.05	
106194	**Hard Floor Tool w/Felt Brush – Scalloped & Flat** Ideal use: hardwood floors.	1½"	14"	79.25	
106793	**8" Sidewinder Hard Floor Tool w/Horse Hair Brush** Ideal use: hard-to-reach areas, walls, ceilings, corners, baseboards, vents, fans and moldings. Use only with wand 105693 or 105695.	1½"	8"	99.67	
106246	**15" Sidewinder Hard Floor Tool w/Nylon Brush** Ideal use: hard-to-reach areas, walls, ceilings, corners, baseboards, vents, fans and moldings. Use only with wand 105693 or 105695.	1½"	15"	79.60	
105692	**18" Sidewinder Hard Floor Tool w/Nylon Brush** Ideal use: hard-to-reach areas, walls, ceilings, corners, baseboards, vents, fans and moldings. Use only with wand 105693 or 105695.	1½"	18"	92.80	
101613	**JetSweep 20 Hard Floor Tool w/Nylon Brush** Ideal use: dust mop type of applications.	1½"	20"	132.58	
107528	**ProBlade Hard Surface Floor Tool** Ideal use: hard surface areas, hard-to-reach areas, walls, ceilings, corners and baseboards. Use only with wand 107529.	1½"	14"	65.20	

Wet/Dry Vacuum Floor Tools

Part No.	Product Name	Wand Diameter	Length	List Price	
107189	**Master Floor Tool** (ProGuard 4) Ideal use: holds floor inserts for specialized cleaning applications.	1½"	14½"	$18.90	
107191	**Carpet Insert** (ProGuard 4 used with 107189) Ideal use: low to medium pile carpeting. Wet pickup nozzle for most carpet cleaning.	1½"	14½"	12.52	
107192	**Floor Brush Insert** (ProGuard 4 used with 107189) Ideal use: tile, marble, vinyl, linoleum. Best for area cleanup on smooth surfaces.	1½"	14½"	22.09	
107193	**Squeegee Insert** (ProGuard 4 used with 107189) Ideal use: used for wet and dry pickup on smooth surfaces.	1½"	14½"	23.35	
107199	**Squeegee Tool** (ProGuard 10/15/16/20) Ideal use: used for wet and dry pickup on smooth surfaces.	1½"	14"	78.02	
107185	**Front Mount Squeegee** (ProGuard 15/20) Ideal use: floor strip recovery, flood restoration applications. The ability to go right up to walls, corners and easier in tight spaces.	1½"	28"	377.44	 Entire assembly not pictured. See Front Mount Squeegee Replacement Parts diagram page 36.
107186	**Front Mount Squeegee Replacement Blade Set** (ProGuard 15/20)	1½"	28"	60.63	

Note: Additional specialty attachments may be available upon request. Contact Customer Service. All attachments are non-metallic unless otherwise noted.

Crevice Tools

Part No.	Product Name	Wand Diameter	Length	List Price	
104832	Replacement Crevice Tool (ProForce 1500XP)	1¼"	4.5"	$5.21	
100107PT	Crevice Tool	1½"	11"	12.96	
103086	Crevice Tool	1¼"	13"	11.15	
100108	Crevice Tool	1½"	17"	17.46	
100109PT	Crevice Tool	1½"	28"	25.10	
107194	Crevice Tool (ProGuard 4)	1½"	10½"	9.33	
834694	Crevice Tool (ProGen)	1½"	8"	4.00	

Dust Brushes

Part No.	Product Name	Wand Diameter	Length	List Price	
103089	Rectangular 90/180° Swivel	1¼"	2½"	$10.71	
100110	Dust Brush	1½"	3"	15.67	
102659	Long Dust Brush (use 100112 Reducer Cuff when used w/High Dusting Kits)	1¼"	5"	18.29	
104833	Combo Upholstery/Dust (ProForce)	1¼"		39.23	
107195	Dust Brush (ProGuard 4)	1½"		11.73	

Upholstery Tools

Part No.	Product Name	Wand Diameter	Length	List Price	
103087	Upholstery Tool (Includes Removable Brush No.103088)	1¼"	5½"	$10.71	
100115	Upholstery Tool	1½"	5"	22.52	
834695	Upholstery Tool (ProGen)	1½"	5"	3.63	

Bulk Pick-Up Tool

Part No.	Product Name	Wand Diameter	Length	List Price	
100150	One-Bend Bulk Pick-Up Tool	1½"	36"	$28.85	

Pipe Cleaner Tools

Part No.	Product Name	Wand Diameter	Length	List Price	
100113	1" to 4" Overhead Pipe Cleaner (includes Reducer Cuff)	1½"	4"	$108.06	
100114	4" to 8" Overhead Pipe Cleaner (includes Reducer Cuff)	1½"	8"	138.74	

Miscellaneous Tool

Part No.	Product Name	Wand Diameter	Length	List Price	
106993	Blower Tool	1½"	2¼"	$22.52	
107196	Claw Nozzle (ProGuard 4)	1½"	4½"	23.28	

Intercept Micro Filters

Thicker, won't shred, treated with antimicrobial organic agent. Double-pleated design gives 21% more filtration area.

Case = 20 packs unless otherwise stated below Pack = 10 filters unless otherwise stated below

No.	Product Name	List Price*
107313	Intercept Micro Filters, fits GoFit 10, Super Coach Pro 10 (Open Collar)	$34.27
107680	Intercept Micro Filters, fits GoFit 10, Super Coach Pro 10 (Closed Collar)	47.67
107314	Intercept Micro Filters, fits GoFit 6, Super Coach Pro 6, GoFree Flex Pro II, ProVac FS 6 (Open Collar)	22.58
107374	Intercept Micro Filters, fits GoFit 6, Super Coach Pro 6, GoFree Flex Pro II, ProVac FS 6 (Closed Collar)	35.86
107666	Intercept Micro Filters, fits GoFit 3 (Open Collar)	24.67
107667	Intercept Micro Filters, fits GoFit 3 (Closed Collar)	33.62
100431	Intercept Micro Filters, fits Super QuarterVac, AviationVac (Open Collar)	20.49
106995	Intercept Micro Filters, fits Super QuarterVac, AviationVac (Closed Collar)	44.07
100331	Intercept Micro Filters, fits Super CoachVac, MegaVac (Open Collar)	27.32
100291	Intercept Micro Filters, fits LineVacer, Super CoachVac, MegaVac (Closed Collar)	51.22
104544	Intercept Micro Filters, fits QuietPro CN HEPA, RunningVac, ProVac CN (Open Collar)	41.13
107377	Intercept Micro Filters, fits ProGen (Closed Collar) (Case = 15 packs)	32.60
103483	Intercept Micro Filters, fits ProForce (Closed Collar)	25.69
106960	Intercept Micro Filters, fits Super HalfVac Pro (Open Collar)	34.27
106973	Intercept Micro Filters, fits Super HalfVac Pro (Closed Collar)	40.33
107182	Intercept Micro Filters, One Pack of 3 fits ProGuard 4 (Closed Collar) (Case = 6 packs)	29.67
107181	Intercept Micro Filters, One Pack of 3 fits ProGuard 10 (Closed Collar) (Case = 6 packs)	40.09
107180	Intercept Micro Filters, One Pack of 3 fits ProGuard 15/20 (Closed Collar) (Case = 6 packs)	58.20
107502	Intercept Micro Filters, fits FreeFlex (Closed Collar)	44.54





** Price is for one pack of 10 filters except ProGuard Filters which are a pack of 3*

Filters made from HEPA Media

No.	Product Name	List Price
A. 106526	Dome Filter made from HEPA Media for older cylindrical backpacks	25.51
B. 107005	Replacement Cartridge made from HEPA Media for Super HalfVac Pro, ProForce and ProGen (sold individually)	11.03
C. 107315	Exhaust Filter made from HEPA Media for Super Coach Pro 6 / 10, GoFree Flex Pro II, ProVac FS 6 (2 pack)	22.00
D. 844488	Exhaust Filter made from HEPA Media for GoFit 10, GoFit 6, GoFit 3 (2 pack)	22.00
E. 847650	Twist-on Dome Filter w/ HEPA Media for GoFit Cordless	10.37
F. 107638	Case of 90 2-packs of 107315 Exhaust Filters made from HEPA Media (180 total filters)	1,778.06

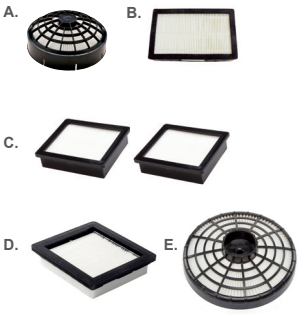

HEPA Filters

No.	Product Name	List Price
A. 847761	HEPA Filter for GoFit 6 HEPA	$313.60
B. 104274PT	HEPA Filter Assembly Complete w/Bottom Cap for LineVacer (Black)	367.87
C. 104275	ULPA Filter Assembly Complete w/Bottom Cap for LineVacer (Black)	507.87
D. 103638	HEPA Filter Assembly w/Electrical Connector for QuietPro CN HEPA	187.51

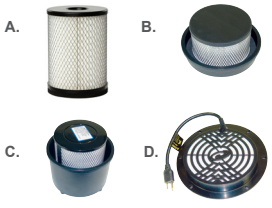

Micro Cloth Filters

No.	Product Name	List Price
834000	Micro Cloth Filter for GoFit 10, Super Coach Pro 10	$56.34
834072	Micro Cloth Filter for GoFit 6, Super Coach Pro 6, GoFree Flex Pro II, ProVac FS 6	46.53
843966	Micro Cloth Filter for GoFit 3	42.39
100564	Micro Cloth Filter for Super QuarterVac, AviationVac	46.53
100565	Micro Cloth Filter for Super CoachVac, MegaVac, LineVacer	56.34
103115	Micro Cloth Filter for QuietPro CN HEPA, RunningVac, ProVac CN	58.77
107040	Micro Cloth Filter for Super HalfVac Pro	46.53
107639	Case of 25 834072 Micro Cloth Filters	833.94

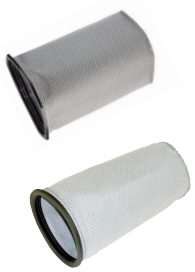

Dome / Foam Filters

No.	Product Name	List Price
A. 510183	Dome Filter with Foam Media for all corded GoFits, Super Coach Pro 10, Super Coach Pro 6, GoFree Flex Pro II, ProVac FS 6	$15.03
100030	Dome Filter with Foam Media for Super CoachVac, Super QuarterVac, MegaVac, AviationVac, LineVacer	15.03
102784	Dome Filter with Foam Media for RunningVac, ProVac CN, QuietPro CN	11.98
B. 510184	Foam Filter Media for Dome Filter for all corded GoFits, Super Coach Pro 10, Super Coach Pro 6, GoFree Flex Pro II, ProVac FS 6	3.65
100343	Foam Filter Media for Dome Filter for Super QuarterVac, Super CoachVac, MegaVac, LineVacer	2.77
107060	Foam Filter Media for Dome Filter for Super HalfVac Pro	5.48
101949	Foam Filter Media for Dome Filter for QuietPro CN HEPA, RunningVac, ProVac CN	2.32
C. 101220	High Filtration Discs for Dome Filter, One Pack of Two for Super QuarterVac, Super CoachVac, MegaVac, AviationVac	20.16
102761	High Filtration Discs for Dome Filter, One Pack of Two for RunningVac, QuietPro CN, ProVac CN	20.58



Sound Muffler and Exhaust Filters

No.	Product Name	List Price
A. 105800	Sound Muffler for Super QuarterVac, AviationVac	$55.12
100597	Sound Muffler for Super CoachVac, MegaVac	55.12
B. 103123	Exhaust/Sound Filter for RunningVac, ProVac CN	49.00
C. 104281	Motor Intake Filter for ProForce	5.78
D. 834721	Motor Intake Filter for ProGen	2.86
E. 105136	Exhaust Filter for ProForce (older side access model)	13.25

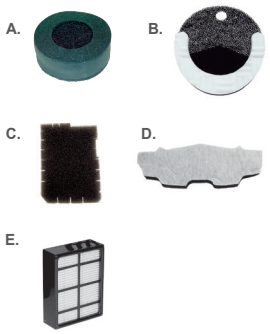

ProGuard Wet / Dry Specialty Filters

No.	Product Name	Filter Media	List Price
A. 107177	Qwik Lock® Wet Filter, fits ProGuard 10/15/16/20	Polypropylene Screen	$38.16
B. 107178	Qwik Lock Fine Dust Cartridge Filter, fits ProGuard LI 3/4	903 sq. in.	28.61
C. 107175	Qwik Lock Fine Dust Cartridge Filter, fits ProGuard 10/15/16/20	1142 sq. in.	38.16
D. 107176	Qwik Lock Filter made from HEPA Media, fits PG 10/15/16/20	1142 sq. in.	47.71

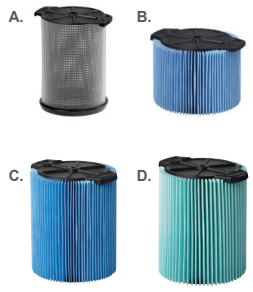

Batteries & Chargers

No.	Product Name	List Price
A. 107724	GoFree Flex Pro II 12Ah Replacement Battery	$1,501.52
B. 107516	GoFree Flex Pro II Battery Charger & Cord	378.49
C. 107683	GoFit Cordless 4Ah Battery	727.55
D. 107684	GoFit Cordless 8Ah Battery	1,160.32
E. 107685	GoFit Cordless Battery Charger	450.89

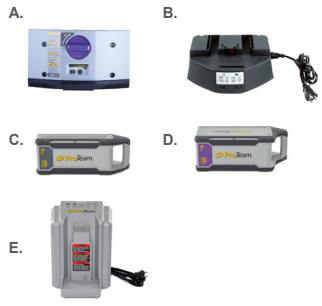

Point-of-Purchase Items****

No.	Product Name	List Price
A. 104029	**Vac Display Mannequin** Custom powder-coated metal backpack display. Holds one vacuum.	$379.02
B. 107595	**Demo Duffel Bag w/Wheels** Durable product demo duffel bag with wheels holds vacuum and complete demo kit.	79.91
C. 100719	**Logo Banner** Attractive 4' x 6' vinyl ProTeam logo banner w/metal grommets for easy display.	71.28
D. 104160	**Floor Mat** Eye catching ProTeam logo mat designed to withstand years of use.	230.82
E. 107632	**Pedestal** 16" ProTeam branded display for showroom or tradeshows. Holds one vacuum. *Displays do not include vacuums.*	57.24



*****Discounts do not apply to Point of Purchase items.*

The Newly Redesigned ProTeam Vac Station

ProTeam's redesigned Vac Station is the essential tool for maintaining a more efficient, safe, and organized cleaning environment. Available as either a one-shelf option or a two-shelf option, the Vac Station can be easily installed and adjusted depending on the user's height and storage needs.

No.	Product Name	List Price
107793	Vac Station w/ One Shelf	$88.33
107794	Vac Station w/ Two Shelves	121.19
510811	Vac Station Wand Clip & Cord Hook	7.76
103071	Mounting Hardware Complete	37.55
106033	Wall Bracket and Screws	16.47



Vac Stations come complete with the platform(s), wand clip accessory, 1 cord holder accessory, 1 wall mounting rail, and 3 mounting screws. A sturdy steel wall bracket is mounted to the wall with three screws. The Vac Station attaches to the bracket and allows for 20" of travel.

ProDuster® and Sleeves

ProDuster sleeves fit over most wand dusters and generate their own dust-attracting properties that collect and hold dust and dirt particles. The sleeves are safe for any surface as they contain no oils or waxes and won't streak or leave any residue. ProDuster sleeves will prolong the life of your wool duster, making them much more economical to replace than the entire duster.
Ask for a FREE sample pack with your next order!

No.	Product Name	List Price
101533	500 Sleeves (10 packs of 50)	$529.09
101532	50 Sleeves (1 pack of 50)	47.08



* Wool duster not included

Miscellaneous

	No.	Product Name	List Price
A.	**107676**	**GoFit Blower Door Accessory (NEW)**	**$29.54**
B.	106346	Waist Belt Extension (18") Nifco	37.11
C.	106345	Waist Belt Extension (10") Nifco	35.55
	107084	Waist Belt Extension for Super HalfVac (Not Shown)	121.94
D.	510738	Cord Holder (yellow)	5.09
E.	101678	50' 16-Gauge Extension Cord (Yellow)*	63.96
	101611	Velcro Cord Strap (Not Shown)	2.75
F.	842193	Cord Lock (all canisters)	13.75
	106261	6' Static Strap Kit (ProForce) (Not Shown)	123.28
	833432	50' 14-Gauge Extension Cord w/Twist Lock Plug (Yellow) (Not Shown)	123.85

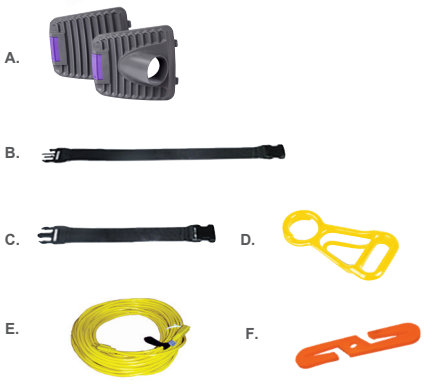

Attachment Replacement Parts

No.	Product Name	List Price
100084	Replacement Brush – 11" Floor Tool (100083)	$ 13.48
100093	Replacement Brush – 16" Floor Tool (100092PT)	17.83
100099	Replacement Nut – Aluminum Wands (100102, 100104, 101338, 107628)	11.70
100100	Replacement Ring – Aluminum Wands (100102, 100104, 101338, 107628, 106293)	2.75
100101	Replacement Sleeve – Aluminum Wands (100102, 100104, 101338, 107628)	10.86
100112	Reducer Cuff 1¼" to 1½"	6.33
100116	Replacement Nylon Brush – 5" Upholstery Tool (100115)	13.53
100137	Replacement Nut – Aluminum Wand (106293)	16.46
100141	Replacement Bumper – 14" Floor Tool (100147)	7.77
100145	Replacement Felt – 14" Floor Tool – Straight (106194)	10.79
100146	Replacement Felt, Scalloped – 14" Floor Tool (100144 & 106194)	10.79
100598	Squeegee Blades for 107199 Tool	24.74
100713	Replacement Nylon Brush – 14" Floor Tool (100623)	24.60
100714	Replacement Nylon & Horse Hair Blend Brush w/Brush, Washer and Screw – 14" Floor Tool (100614)	31.82
101092	Reducer Cuff 1½" x 1¼" For Hose	21.45
101155	Replacement Nylon Brush – E-Z Glide 14" Floor Tool (101446)	6.54
101445	Retro Kit – 14" E-Z Glide Floor Tool (fits 101446 Floor Tool & 100147) (purple bumper, brush & screws)	39.43
101473	Repair Clip with Screws – 14" Hard Floor Tool w/Nylon Brush (100623)	3.50
101475	Repair Kit – Felt Floor Tools: Support Bars and Screws	18.18
101880	Replacement Nylon Brush – JetSweep 20, 20" Hard Floor Tool, Set of Two (101613)	26.99
103088	Removable Brush – 5½" Upholstery Tool (103087)	8.66
103099	Cuff Adapter 1¼" x 1¼"	4.30
103122	Cuff Adapter 1½ Friction Fit	9.87
106064	Replacement Brush – 12" Floor Tool (103084)	20.29
106961	Replacement Sleeve w/Rivets – Aluminum Wand (106293)	27.32
107020	Replacement Hose – Sidewinder Floor Tool (101475)	4.66
107076	Shoe Kit (107015 Xover Performance Floor Tool)	49.46
107077	Brush Strip (107016 Xover Productivity Floor Tool)	8.62
107078	Shoe Kit (107016 Xover Productivity Floor Tool)	49.46
107125	Button Lock Repair Kit Telescoping Wand (106343)	15.83
450017	Adjusting Nut for Telescoping Wand (106290)	14.68
510413	Straight Telescoping Wand Latch Replacement (107529) and Two-Piece, Two-Bend Telescoping Wand (107628)	8.14
842300	Wand Adapter – Friction Fit Tool to Coupling on Wand	11.23

ProGuard Front Mount Squeegee Replacement Parts

No.		Product Name	List Price
1	833532	Squeegee	$151.42
2	833523	Squeegee Pivot Plate Assembly	161.20
3	833542	Oval Hand Knob	22.20
4	833442-1	Hose Assembly	20.49
5	833528	Squeegee Mounting Bracket	53.30
6	833529	Spring	16.19
7	830536-1	Wire Tie	10.65
8	833530	Rod	11.31
9	832397-2	3/8" Bolt	23.33
10	161255-2	3/8" Lock Nut	1.56
11	107186	Replacement Blades (set of 2)	60.63

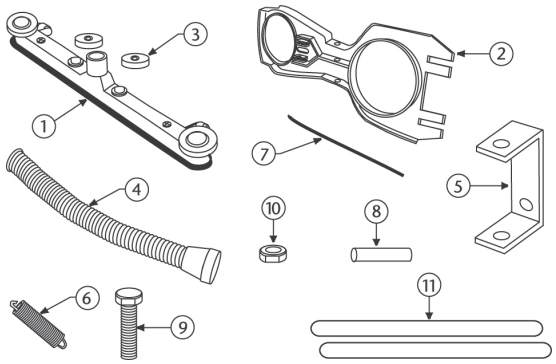

GOFIT 3, 6, 6 PLUS, 6 HEPA & 10 PARTS

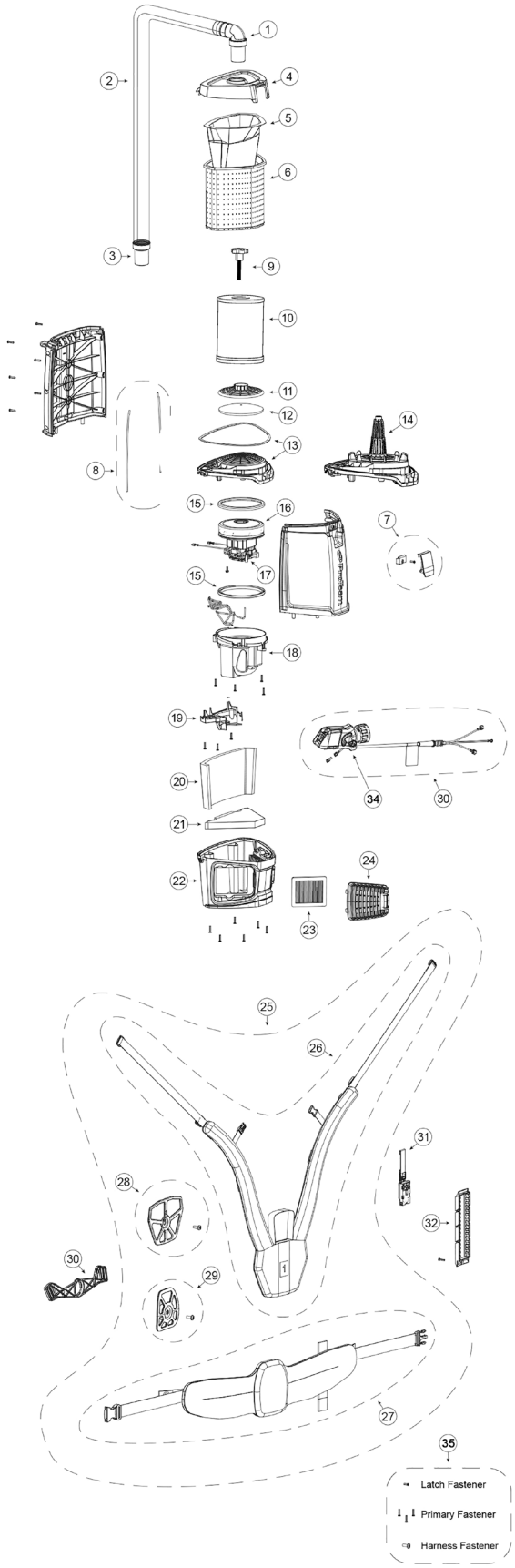

No.		Product Name	Qty	List Price
1A	101928	Replacement Double Swivel Elbow Cuff	1 ea.	$17.27
1B	100694	Replacement Double Swivel Straight Cuff	1 ea.	10.30
2	107648	48" Static-Dissipating Hose w/Non-Replaceable Elbow and Straight Cuffs	1 ea.	41.57
	100505	48" Static-Dissipating Hose w/ Straight Cuffs	1 ea.	39.73
3	100694	Replacement Double Swivel Straight Cuff	1 ea.	10.30
4	843694	Purple Cap	1 ea.	38.21
5	107313	Intercept Micro Filter (GoFit 10)	10/pk	34.27
	107314	Intercept Micro Filter (GoFit 6)	10/pk	22.58
	107374	Intercept Micro Filter (GoFit 6 HEPA)	10/pk	35.86
	107666	Intercept Micro Filter (GoFit 3)	10/pk	24.67
6	834000	Micro Cloth Filter (GoFit 10)	1 ea.	56.34
	834072	Micro Cloth Filter (GoFit 6)	1 ea.	46.53
	843966	Micro Cloth Filter (GoFit 3)	1 ea.	42.39
7	510779	Latch Assembly Complete w/ Retainer and Screw	1 ea.	9.17
8	834035-5	Gasket Tank 10 QT	2 ea.	4.85
	834035-3	Gasket Tank 6 QT	2 ea.	4.85
	834035-4	Gasket Tank 3 QT	2 ea.	4.85
9	847834	Filter Knob (GoFit 6 HEPA)	1 ea.	5.04
10	847761	HEPA Filter (GoFit 6 HEPA)	1 ea.	313.60
11	510183	Dome Filter w/ Foam Media (includes: 10)	1 set	15.03
12	510184	Foam Filter Media for Dome Filter	1 ea.	3.65
13	510777	Upper Motor Support w/ Gasket	1 ea.	17.75
14	847768	Upper Motor Support (GoFit 6 HEPA)	1 ea.	15.50
15	510780	Motor Gaskets Upper and Lower	1 ea.	5.01
	510812	Upper & Lower Motor Gaskets (GoFit 6 HEPA)	1 set	6.23
16	844193	Motor Assembly 1300W	1 ea.	207.92
	844545	Motor Assembly with Lead (GoFit 6 PLUS)	1 ea.	214.14
	847770	Motor Assembly (GoFit 6 HEPA)	1 ea.	168.53
17	841933	Carbon Brush Set	2 ea.	39.92
18	510781	Lower Motor Support w/ Screws	1 set	11.57
19	510776	Cover Wire w/ Screws	1 set	5.62
20	843963	Upper Foam Pad	1 ea.	3.99
21	843964	Lower Foam Pad	1 ea.	3.95
22	510778	Lower Housing Assembly w/ Screws	1 set	26.21
23	844488	Exhaust Filter Made from HEPA Media	2 ea.	22.00
24	843848	Exhaust Filter Door	1 ea.	9.69
25	844073	Harness Complete Assembly	1 ea.	133.20
26	844665	Upper Harness Assembly	1 ea.	67.07
27	843939	Lower Harness Assembly	1 ea.	65.62
28	510771	Upper Harness Plate w/ Screw	1 ea.	9.45
29	510772	Lower Harness Plate w/ Screw	1 ea.	9.60
30	843842	Lower Harness Articulating Arm	1 ea.	7.78
31	843947	Harness Quick Adjuster Assembly	1 ea.	11.24
32	510773	Harness Quick Adjust Holder w/ Screw (GoFit 10)	1 set	7.91
	510774	Harness Quick Adjust Holder w/ Screw (GoFit 6)	1 set	7.91
	510775	Harness Quick Adjust Holder w/ Screw (GoFit 3)	1 set	7.91
33	844156	Switch Box Assembly	1 ea.	62.34
	844156-2	Switch Box Assembly w/ Internal Electronics (GoFit 6 PLUS)	1 ea.	101.56
	844156-1	Switch Box Assembly for GoFit PH service (GoFit PH)	1 ea.	77.87
34	510782	Yellow Cord Guide w/ Screws	1 ea.	13.12
35	510783	Fastener Package	1 ea.	4.82
	101678	50' Extension Cord (Not shown)	1 ea.	63.96

Highlighted SKUs are shared parts with Super Coach Pro 6/10 vacuums

GOFIT 3 & 6 CORDLESS PARTS

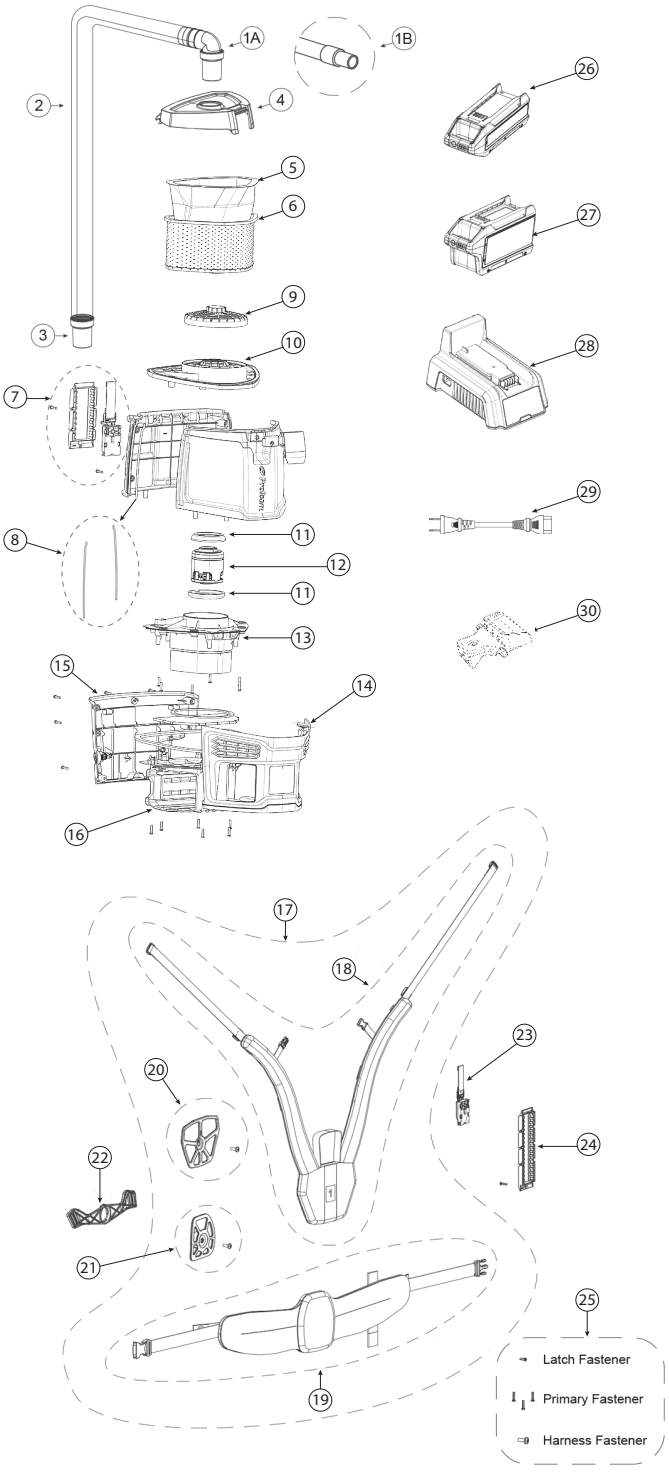

No.		Product Name	Qty	List Price
1A	101928	Replacement Double Swivel Elbow Cuff	1 ea.	$17.27
1B	100694	Replacement Double Swivel Straight Cuff	1 ea.	10.30
2	100505	48" Static-Dissipating Hose w/ Straight Cuffs	1 ea.	39.73
	107648	48" Static-Dissipating Hose w/ Non Replaceable Cuffs	1 ea.	41.57
3	100694	Replacement Swivel Cuff 1 ½"	1 ea.	10.30
4	843694	Purple Cap	1 ea.	38.21
5	107314	Intercept Micro Filter (GoFit 6)	10/pk	22.58
	107666	Intercept Micro Filter (GoFit 3)	10/pk	24.67
6	834072	Micro Cloth Filter (GoFit 6)	1 ea.	46.53
	843966	Micro Cloth Filter (GoFit 3)	1 ea.	42.39
7	510779	Latch Assembly Complete w/ Retainer and Screw	1 ea.	9.17
8	834035-3	Gasket Tank 6 QT Cordless	2 ea.	4.85
	834035-4	Gasket Tank 3 QT Cordless	2 ea.	4.85
9	847650	Twist-On Dome Filter w/ HEPA Media	1 ea.	10.37
10	510802	Upper Motor Support w/ Gasket	1 ea.	14.02
11	510803	Motor Gaskets Upper and Lower	1 set	5.32
12	510804	Motor Assembly 60V	1 ea.	118.94
13	510805	Lower Motor Support w/ Screws	1 set	9.04
14	510806	Front Housing Assembly w/ Screws	1 set	33.54
15	510807	Rear Housing Assembly w/ Screws w/ on/off switch	1 set	23.72
16	510808	Battery Housing Assembly w/ Screws	1 set	30.81
17	844073	Harness Complete Assembly	1 ea.	133.20
18	844665	Upper Harness Assembly	1 ea.	67.07
19	843939	Lower Harness Assembly	1 ea.	65.62
20	510771	Upper Harness Plate w/ Screw	1 ea.	9.45
21	510772	Lower Harness Plate w/ Screw	1 ea.	9.60
22	843842	Lower Harness Articulating Arm	1 ea.	7.78
23	843947	Harness Quick Adjuster Assembly	1 ea.	11.24
24	510774	Harness Quick Adjust Holder w/ Screw (GoFit 6)	1 set	7.91
	510775	Harness Quick Adjust Holder w/ Screw (GoFit 3)	1 set	7.91
25	510783	Fastener Package	1 ea.	4.82
26	107683	GoFit 4Ah Battery	1 ea.	727.55
27	107684	GoFit 8Ah Battery	1 ea.	1,160.32
28	107685	GoFit Battery Charger and Cord	1 ea.	450.89
29	847718	GoFit Charger Cord	1 ea.	9.35
30	844754	Battery Button Latch	1 ea.	2.32

Highlighted SKUs are shared parts with GoFit Corded Backpack Vacuums

SUPER COACH PRO 6 & 10 / PROVAC FS 6 PARTS

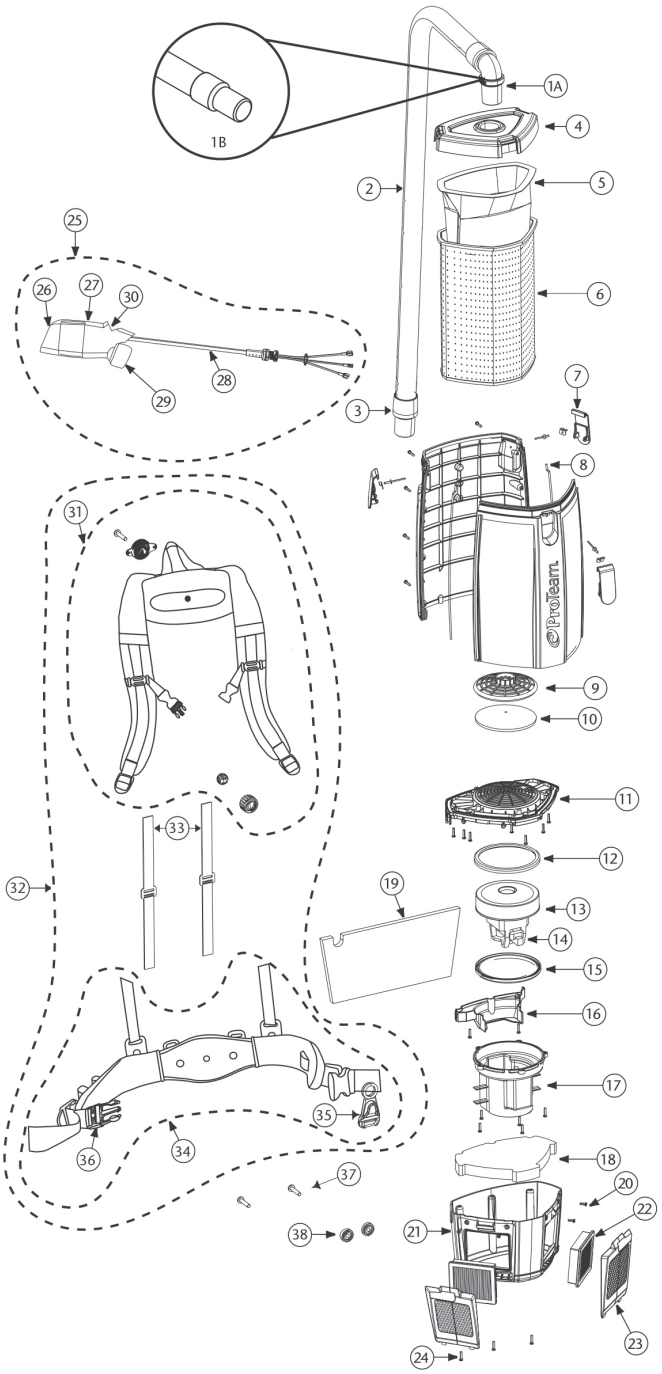

	No.	Product Name	Qty	List Price
1A	101928	Replacement Double Swivel Elbow Cuff	1 ea.	$17.27
1B	100694	Replacement Double Swivel Straight Cuff (PV FS)	1 ea.	10.30
2	107648	48" Static-Dissipating Hose w/ Non-Replaceable Elbow & Straight Cuffs	1 ea.	41.57
	100505	48" Static-Dissipating Hose w/Straight Cuffs (PV FS)	1 ea.	39.73
3	100694	Replacement Double Swivel Straight Cuff	1 ea.	10.30
4	833948	Top Cap (Purple)	1 ea.	51.72
	833948-1	Top Cap (Black) (PV FS)	1 ea.	51.72
5	107313	Intercept Micro Filter (SCP 10)	10/pk	34.27
	107314	Intercept Micro Filter (SCP 6 & PV FS)	10/pk	22.58
6	834000	Micro Cloth Filter (SCP 10)	1 ea.	56.34
	834072	Micro Cloth Filter (SCP 6 & PV FS)	1 ea.	46.53
7	510179	Latch and Retainer w/Lock Nut & Screw	1 set	11.09
8	510180	Gasket for Tank (SCP 10)	2 ea.	8.78
	510181	Gasket for Tank (SCP 6 & PV FS)	2 ea.	6.47
9	510183	Dome Filter w/Foam Media (includes: 10)	1 set	15.03
10	510184	Foam Filter Media for Dome Filter	1 ea.	3.65
11	510193	Upper Motor Support w/Gasket	1 set	11.13
12	833951	Upper Motor Gasket	1 ea.	5.39
13	836099	Motor/Fan (120 V) (Wolong)	1 ea.	224.89
14	841933	Carbon Brush Set (Wolong)	1 set	39.92
	101720	Carbon Brush Set (Ametek)	1 set	31.82
15	833952	Lower Motor Gasket	1 ea.	4.80
16	510185	Cover Wire w/2 screws	1 set	3.92
17	510194	Lower Motor Support (5 screws)	1 set	19.90
18	834042	Triangular Lower Foam Pad	1 ea.	5.56
19	834043	Rectangular Upper Foam Pad	1 ea.	5.09
20	808380-0	Screw Pan CR #8 x ½"	1 ea.	1.33
21	510188	Lower Housing Assembly w/Screws	1 set	36.10
22	107315	Exhaust Filter made from HEPA Media (2 pack)	1 set	22.00
23	841708	Exhaust Filter Door w/Latch	1 ea.	10.61
24	808380-22	Screw Pan CR #8 x ¾"	1 ea.	1.63
25	836225-1	Switch Cord and Power Cord Assembly (includes: 26-30) (PV FS)	1 set	76.08
	836225	Switch Box, Full Assembly (without power receptacle)	1 set	57.06 13.61
26	106066	On/Off Switch	1 ea.	61.56
27	836554-1	Switch Box (PV FS)	1 ea.	45.96
	836554	Switch Box (without power cord)	1 ea.	20.01
28	836480	Power Cord Assembly	1 ea.	19.02
29	841724	Power Plug Assembly	1 ea.	10.19
30	836478	Electrified Hose Receptacle (PV FS)	1 ea.	12.79
31	840112	Upper Harness Assembly	1 set	134.26
32	840011	FlexFit Harness Assembly (includes: 31, 33-34)	1 set	19.02
33	510192	Tensioning Straps	1 set	19.02
34	840114	Lower Harness Assembly (includes: 35, 36)	1 set	135.05
35	510738	Cord Holder	1 ea.	5.09
36	510301	Waist Belt Buckles and Straps Set	1 set	21.91
37	834051	5/16" - 18 x 1 3/8" Lock Screw (2 screws)	1 set	9.27
38	510186	Harness Spacers	2 ea.	5.90
	101678	50' Extension Cord (Not Shown)	1 ea.	63.96

SUPER COACHVAC PARTS

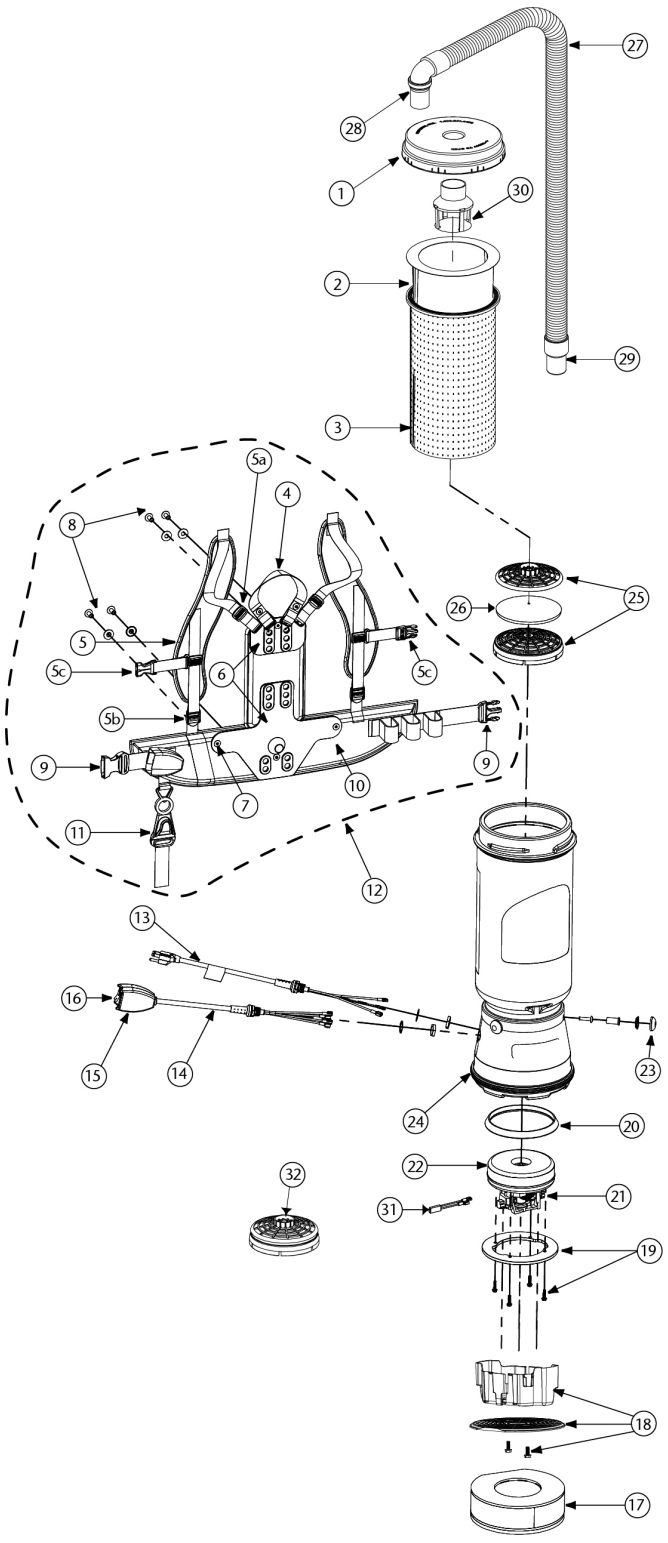

	No.	Product Name	Qty	List Price
1	100197	Twist Cap (Purple)	1 ea.	$ 51.72
2	100331	Intercept Micro Filter	10/pk	27.32
3	100565	Micro Cloth Filter	1 ea.	56.34
4	100356	Shoulder Strap Assembly (includes: 5a, 5b)	1 set	32.46
	100354	Strap Assembly Complete (includes: 4, 10)	1 set	99.83
5a	100358	Shoulder Strap Plastic Adjustment Buckle (Top)	1 ea.	1.54
5b	100357	Shoulder Strap Plastic Adjustment Buckle (Bottom)	1 ea.	1.93
6	105046	Backplate (includes: 7)	1 ea.	49.91
7	100375	Barrel Nut Connection Set for Backplate (Replacement)	1 set	8.99
8	100716	Backplate (Black) Connection Set: 4 Screws w/Washers	1 set	24.96
9	106719	Waist Belt Keeper and Latch	1 ea.	22.64
10	100359	Waist Belt (includes: 9)	1 ea.	74.84
11	510738	Cord Holder	1 ea.	5.09
12	103166	Backplate (Black) System Complete (includes: 4-11)	1 set	124.76
13	100641	Power Cord Assembly	1 set	36.21
14	101610	Switch Cord Assembly (includes: 15, 16)	1 set	69.91
	101714	Switch Cord w/Crimps	1 ea.	31.00
15	101472	Switch Box w/Velcro and New Lamb Switch	1 set	44.92
16	106066	On/Off Switch (must use with #106287)	1 ea.	13.61
	106287	Switch Box w/Velcro and Screws	1 ea.	33.54
17	100597	Sound Muffler	1 ea.	55.12
18	105044	Motor Shroud/Diffuser w/Screw Set: 2 Screws	1 set	42.79
19	100335	Motor Compression Ring w/Screws	1 set	24.01
	100378	Compression Ring Screw Set: 4 Screws	1 set	4.50
20	100014	Motor Gasket	1 ea.	22.52
21	105164	Carbon Brush Set (Domel Motor)	1 set	31.82
	101720	Carbon Brush Set (Ametek Motor)	1 set	31.82
22	105162	Motor/Fan (120 V) w/Crimps	1 ea.	178.98
	100379	Motor Ground and Wire Clamp Set w/Screws	1 set	8.99
	100380	Motor Crimp Set: 4 Female, 4 Male, Ground Crimp Connector	1 set	15.94
23	100368	Motor Mounting System Set: 3 Well Nuts, 3 Bolts, 3 Washers, 3 Covers	1 set	24.96
24	100586	Bottom Bumper	1 ea.	13.76
25	100030	Dome Filter w/Foam Media (includes: 26)	1 ea.	15.03
26	100343	Foam Filter Media for Dome Filter	1 ea.	2.77
	101220	High Filtration Disk (optional)	2/pk	20.16
27	107648	48" Static-Dissipating Hose w/ Non-Replaceable Elbow & Straight Cuffs	1 ea.	41.57
28	101928	Replacement Double Swivel Elbow Cuff	1 ea.	17.27
29	100694	Replacement Double Swivel Straight Cuff	1 ea.	10.30
30	101543	Filter Guard (Optional)	1 ea.	14.39
31	107294	Thermal Protector	1 ea.	21.85
32	106526	Dome Filter made from HEPA Media	1 ea.	25.51
	101678	50' Extension Cord (Not Shown)	1 ea.	63.96

SUPER QUARTERVAC PARTS

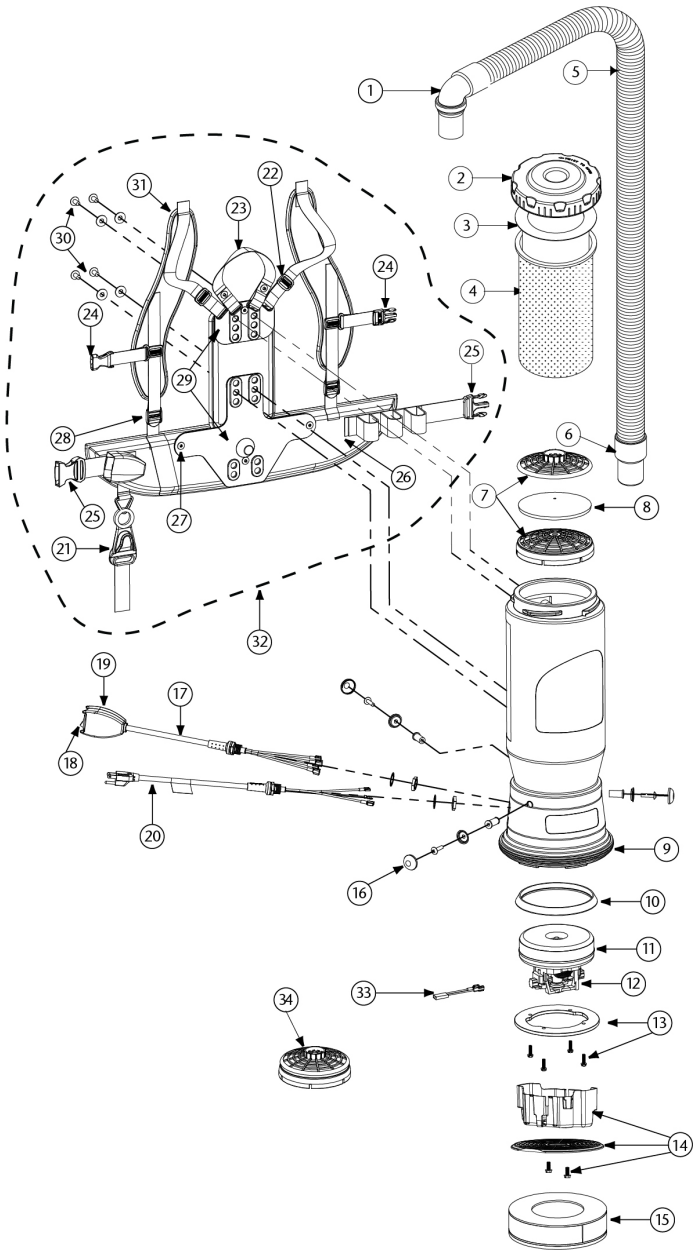

	No.	Product Name	Qty	List Price
1	101928	Replacement Double Swivel Elbow Cuff	1 ea.	$17.27
2	106073	Twist Cap (Purple)	1 ea.	43.79
3	100431	Intercept Micro Filter	10/pk	20.49
4	100564	Micro Cloth Filter	1 ea.	46.53
5	107648	48" Static-Dissipating Hose w/ Non-Replaceable Elbow and Straight Cuffs	1 ea.	41.57
6	100694	Replacement Double Swivel Straight Cuff	1 ea.	10.30
7	100030	Dome Filter w/Foam Media (includes: 8)	1 ea.	15.03
8	100343	Foam Filter Media for Dome Filter	1 ea.	2.77
	101220	High Filtration Disk (optional)	2/pk	20.16
9	100586	Bottom Bumper	1 set	13.76
10	100014	Motor Gasket	1 ea.	22.52
11	105162	Motor/Fan (120 V) w/Crimps	1 ea.	178.98
	100379	Motor Ground Wire Clamp Set w/Screws	1 set	8.99
	100380	Motor Crimp Set: 4 Female, 4 Male, Ground Crimp Connector	1 set	15.94
12	105164	Carbon Brush Set (Domel)	1 set	31.82
	101720	Carbon Brush Set (Ametek)	1 set	31.82
13	100335	Motor Compression Ring w/Screws	1 set	24.01
	100378	Compression Ring Screws: 4 Screws	1 set	4.50
14	105044	Motor Shroud/Diffuser w/Screw Set: 2 Screws	1 set	42.79
15	105800	Sound Muffler	1 ea.	55.12
16	100368	Motor Mounting System Set: 3 Well Nuts, 3 Bolts, 3 Washers, 3 Covers	1 set	24.96
17	101610	Switch Cord Assembly (includes: 18, 19)	1 set	69.91
	101714	Switch Cord w/Crimps	1 set	31.00
18	106066	On/Off Switch (must use with #106287)	1 ea.	13.61
19	101472	Switch Box w/Velcro and New Lamb Switch	1 set	44.92
	106287	Switch Box w/Velcro and Screws	1 ea.	33.54
20	100641	Power Cord Assembly	1 set	36.21
21	510738	Cord Holder	1 ea.	5.09
22	100358	Shoulder Strap Plastic Adjustment Buckle (Top)	1 ea.	1.54
23	106719	Waist Belt Keeper and Latch	1 set	22.64
24	100359	Waist Belt (includes: 23)	1 set	74.84
25	100375	Barrel Nut Connection Set for Backplate (Replacement)	1 set	8.99
26	100357	Shoulder Strap Plastic Adjustment Buckle (Bottom)	1 ea.	1.93
27	105046	Backplate (includes: 25)	1 set	49.91
28	100716	Backplate (Black) Connection Set: 4 Screws w/Washers	1 set	24.96
29	100356	Shoulder Strap Assembly (includes: 22, 26)	1 set	32.46
	100354	Strap Assembly Complete (includes: 24, 29)	1 set	99.83
30	103166	Backplate System Complete (includes: 21-29)	1 set	124.76
31	107294	Thermal Protector	1 ea.	21.85
32	106526	Dome Filter made from HEPA Media	1 ea.	25.51
	101678	50' Extension Cord (Not Shown)	1 ea.	63.96

MEGAVAC PARTS

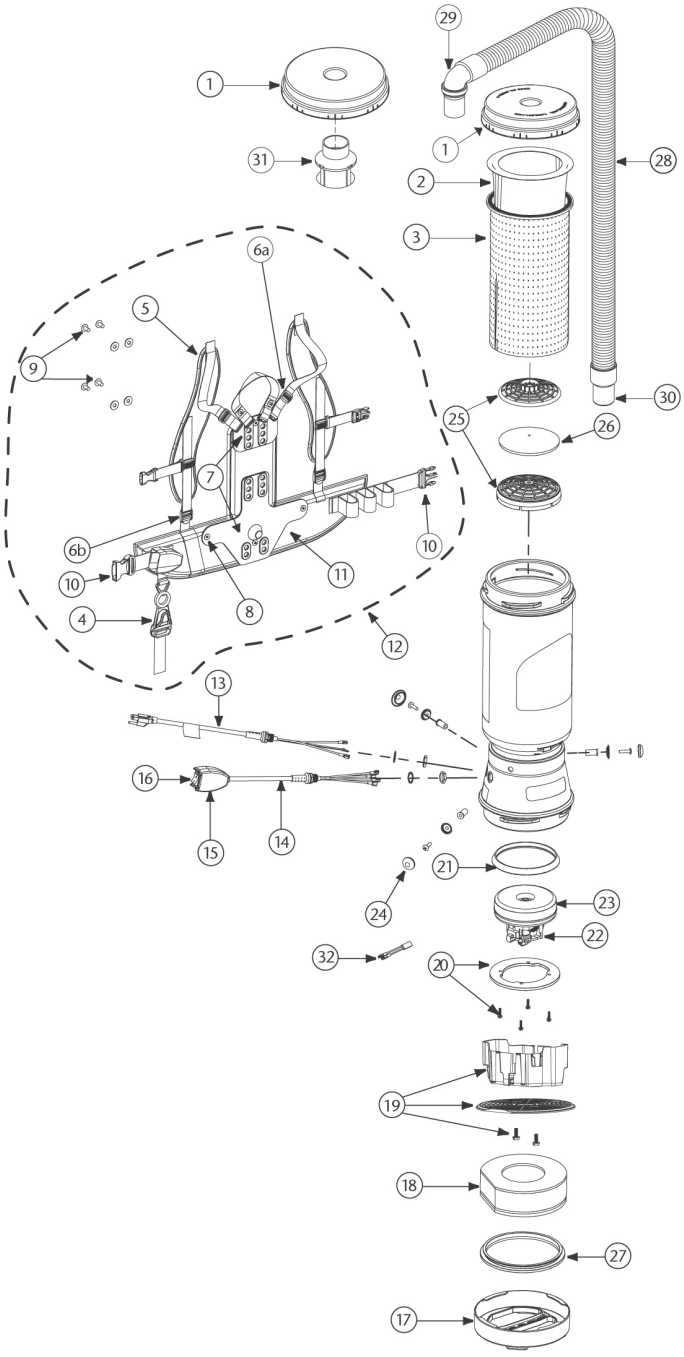

	No.	Product Name	Qty	List Price
1	100320	Twist Cap (Black)	1 ea.	$ 51.72
2	100331	Intercept Micro Filter	10/pk	27.32
3	100565	Micro Cloth Filter	1 ea.	56.34
4	510738	Cord Holder	1 ea.	5.09
5	100356	Shoulder Strap Assembly (includes: 6a, 6b)	1 set	32.46
	100354	Strap Assembly Complete (includes: 5, 11)	1 set	99.83
6a	100358	Shoulder Strap Plastic Adjustment Buckle (Top)	1 ea.	1.54
6b	100357	Shoulder Strap Plastic Adjt. Buckle (Bottom)	1 ea.	1.93
7	105046	Backplate (includes: 8)	1 ea.	49.91
8	100375	Barrel Nut Connection Set for Backplate (Repl.)	1 set	8.99
9	100374	Backplate Connection Set: 4 Screws w/Washers, Stand Offs	1 set	24.96
10	106719	Waist Belt Keeper and Latch	1 ea.	22.64
11	100359	Waist Belt (includes: 10)	1 set	74.84
12	103166	Backplate System Complete (includes: 4-11)	1 set	124.76
13	100641	Power Cord Assembly	1 set	36.21
14	101610	Switch Cord Assembly (includes: 15, 16)	1 set	69.91
	101714	Switch Cord w/Crimps	1 ea.	31.00
15	101472	Switch Box w/Velcro and New Lamb Switch	1 set	44.92
	106287	Switch Box w/Velcro and Screws	1 ea.	33.54
16	106066	On/Off Switch (must use with #106287)	1 ea.	13.61
17	105070	Bottom Twist Cap (Black)	1 ea.	74.84
18	100597	Sound Muffler	1 ea.	55.12
19	105044	Motor Shroud/Diffuser w/Screw Set: 2 Screws	1 set	42.79
20	100335	Motor Compression Ring w/Screws	1 set	24.01
	100378	Compression Ring Screw Set: 4 Screws	1 set	4.50
21	100014	Motor Gasket	1 ea.	22.52
22	105164	Carbon Brush Set for MegaVac (Domel Motor)	1 set	31.82
	101720	Carbon Brush Set for MegaVac (Ametek Motor)	1 set	31.82
23	105162	Motor/Fan (120V) w/Crimps for MegaVac	1 set	178.98
	100379	Motor Ground and Wire Clamp Set w/Screws	1 set	8.99
	100380	Motor Crimp Set: 4 Female, 4 Male, Ground Crimp Connector	1 set	15.94
24	100368	Motor Mounting System Set: 3 Well Nuts, 3 Bolts, 3 Washers, 3 Covers	1 set	24.96
25	100030	Dome Filter w/Foam Media (includes: 26)	1 ea.	15.03
26	100343	Foam Filter Media for Dome Filter	1 ea.	2.77
	101220	High Filtration Disk (optional)	2/pk	20.16
27	104998	Bottom Twist Cap Gasket	1 ea.	17.49
28	107648	48" Static-Dissipating Hose w/ Non-Replaceable Elbow and Straight Cuffs	1 ea.	41.57
29	101928	Replacement Double Swivel Elbow Cuff	1 ea.	17.27
30	100694	Replacement Double Swivel Straight Cuff	1 ea.	10.30
31	101543	Filter Guard (Optional)	1 ea.	14.39
32	107294	Thermal Protector	1 ea.	21.85
	101678	50' Extension Cord (Not Shown)	1 ea.	63.96

GOFREE FLEX PRO II PARTS

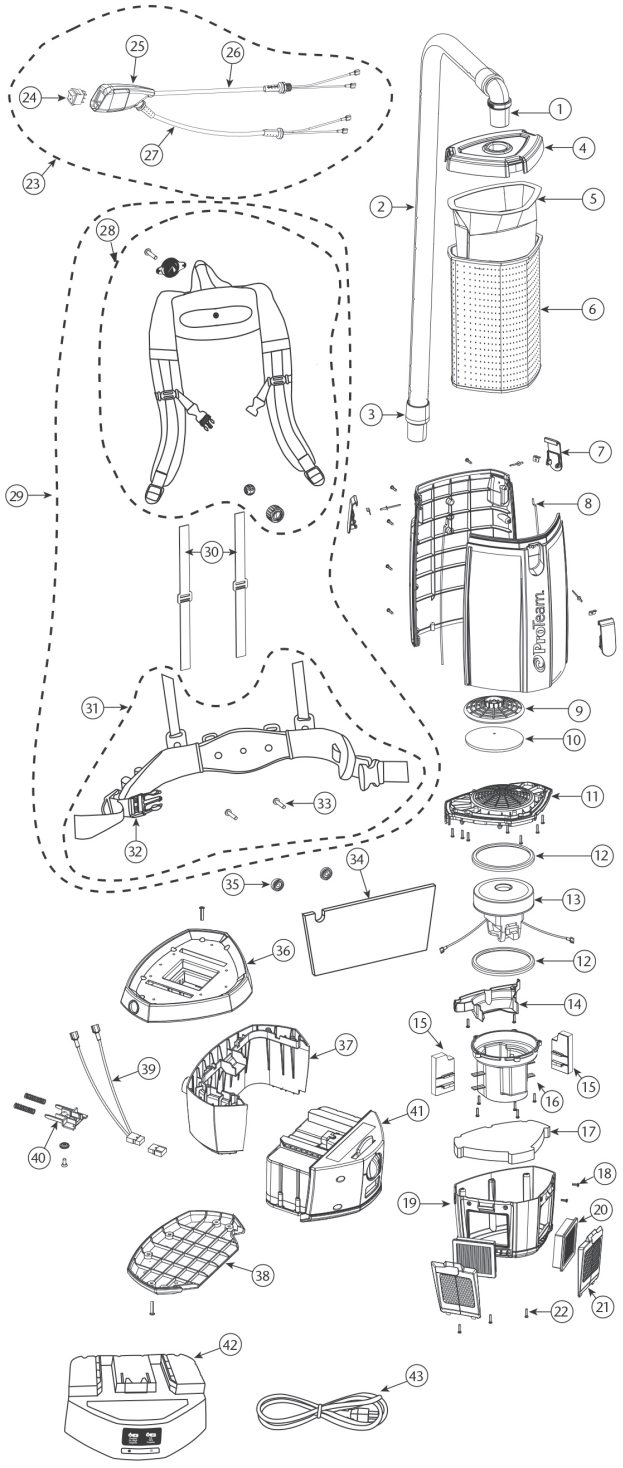

	No.	Product Name	Qty	List Price
1	101928	Replacement Double Swivel Elbow Cuff 1½"	1 ea.	$17.27
	102715	Replacement Double Swivel Elbow Cuff 1¼"	1 ea.	18.21
2	107648	48" Static-Dissipating Hose w/ Non-Replaceable Elbow and Straight Cuffs	1 ea.	41.57
	103237	56" Static-Dissipating Hose w/Cuffs (Black) 1¼"	1 ea.	39.73
3	100694	Replacement Double Swivel Straight Cuff	1 ea.	10.30
	103279	Replacement Swivel Cuff (Black) 1¼"	1 ea.	12.77
4	833948	Top Cap (Purple)	1 ea.	51.72
5	107314	Intercept Micro Filter (Open Collar)	10/pk	22.58
	107374	Intercept Micro Filter (Closed Collar)	10/pk	35.86
6	834072	Micro Cloth Filter	1 ea.	46.53
7	510179	Latch and Retainer w/Lock Nut & Screw	1 set	11.09
8	510181	Gasket for Tank	2 ea.	6.47
9	510183	Dome Filter w/Foam Media (includes: 10)	1 set	15.03
10	510184	Foam Filter Media for Dome Filter	1 ea.	3.65
11	510193	Upper Motor Support w/Gasket	1 set	11.13
12	510741	Motor Gasket (GFFP II only)	1 ea.	14.41
	840899	Motor Gasket (old)	1 ea.	12.21
13	510740	Motor/Fan (36VDC) w/Gasket (GFFP II only)	1 ea.	317.74
14	510185	Cover Wire w/2 screws	1 set	3.92
15	510742	Left/Right Baffles	1 set	8.27
16	510194	Lower Motor Support (5 screws)	1 set	19.90
17	834042	Triangular Lower Foam Pad	1 ea.	5.56
18	808380-0	Screw Pan CR #8 x ½"	1 ea.	1.33
19	510216	Housing Assembly Lower w/Screws	1 set	23.68
20	107315	Exhaust Filter made from HEPA Media (2 pk)	1 set	22.00
21	841708	Exhaust Filter Door w/ Latch	1 ea.	10.61
22	808380-22	Screw Pan CR #8 x ¾"	1 ea.	1.63
23	843473	Switch Cord and Power Cord Assembly (includes: 24-27) (GFFP II only)	1 set	40.75
	834249	Switch Cord and Power Cord Assembly (includes: 24-27) (old)	1 set	106.08
24	105147	On/Off Switch	1 ea.	26.47
25	107043	Switch Box	1 set	33.54
26	843475	Switch Cord Assembly	1 set	10.18
27	841726	Battery Cord Assembly	1 set	17.74
28	840112	Upper Harness Assembly	1 set	134.26
29	840011	FlexFit Harness Assembly (includes: 28-37)	1 set	288.25
30	510192	Tensioning Straps	1 set	19.02
31	840114	Lower Harness Assembly (includes: 36, 37)	1 set	135.05
32	510301	Waist Belt Buckles and Straps Set	1 set	21.91
33	834051	5/16" - 18x1 - 3/8" Lock Screw (2 screws)	1 set	9.27
34	834043	Rectangular Upper Foam Pad	1 ea.	5.09
35	510186	Harness Spacers	2 ea.	5.90
36	510218	Upper Battery Housing	1 ea.	24.82
37	510217	Lower Battery Housing	1 ea.	24.38
38	510219	Battery Support	1 ea.	27.79
39	510220	Lead Assembly w/Screw	1 ea.	18.20
40	510221	Actuator w/Washer, Screw, Springs	1 set	12.52
41	107724	12Ah Battery	1 ea.	1,501.52
42	107516	Battery Charger and Charger Cord	1 set	378.49
43	834678	Charger Cord	1 ea.	46.96

PROGEN 12 / 15 PARTS

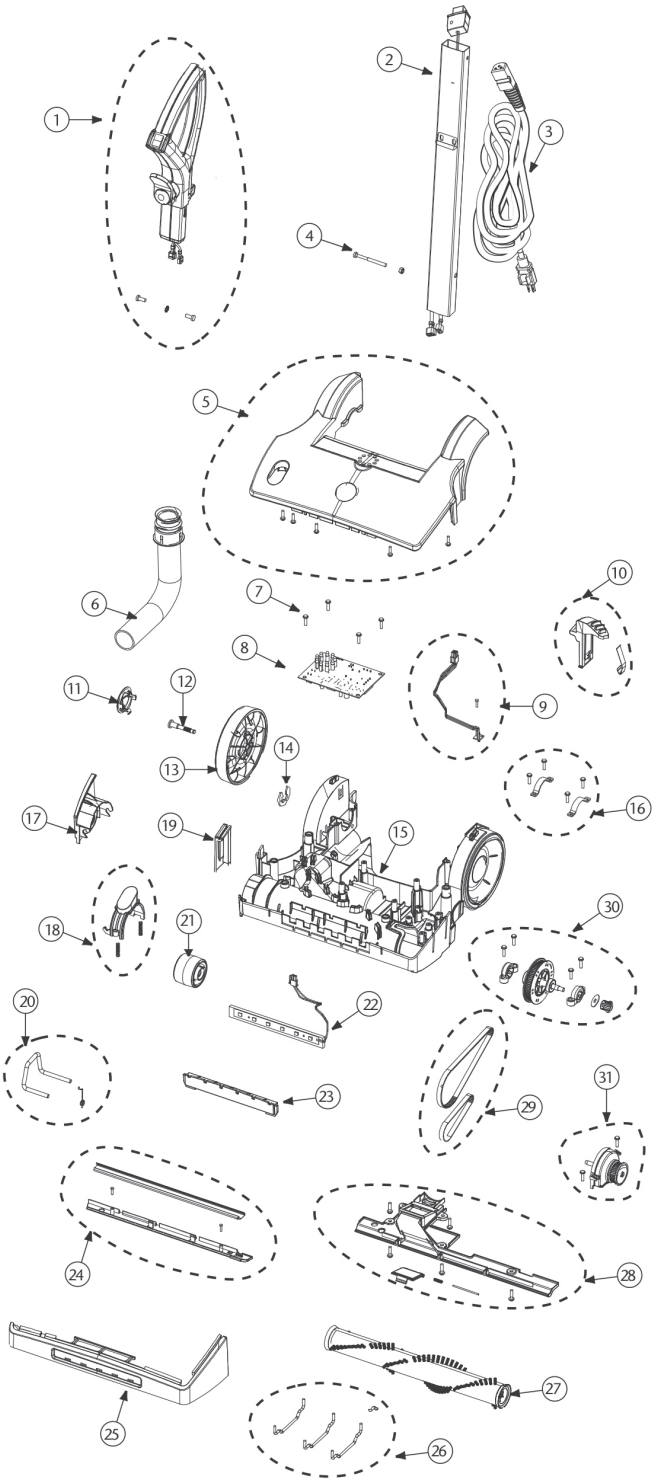

	No.	Product Name	Qty	List Price
1	842344	Handle Assembly	1 set	$33.82
2	842345	Handle Tube Assembly	1 ea.	37.73
3	834740-1	15" Power Cord w/Strain Relief 50'	1 ea.	81.35
	834740	12" Power Cord w/Strain Relief 40'	1 ea.	66.61
4	835701	Handle Screw Nut Assembly	1 ea.	2.38
5	835686	15" Base Cover Assembly	1 set	43.00
	835707	12" Base Cover Assembly	1 set	40.74
6	510252	Hose Power Head Assembly	1 ea.	7.29
7	835345	Washer Pan Screw M4	1 ea.	3.86
8	834797	Main Control Board	1 ea.	123.65
9	835683	Control Board Hall Effect Assembly	1 set	11.53
10	835676	15" Foot Pedal Assembly	1 set	5.13
	835702	12" Foot Pedal Assembly	1 set	4.77
11	834788	Cap Button	1 ea.	3.15
12	834789	15" Rear Wheel Shaft	1 ea.	3.93
13	834787	15" Rear Wheel	1 ea.	18.69
	836630	12" Rear Wheel	1 ea.	10.47
14	834790	Retaining Ring	1 ea.	2.08
15	834804	15" Power Nozzle Base	1 ea.	68.70
	836627	12" Base Assembly (includes: 10)	1 ea.	52.46
16	835684	Filter Housing Clamp Assembly	1 set	3.31
17	835350	15" Brush Removal Cover Assembly	1 ea.	7.10
	835352	12" Brush Removal Cover Assembly	1 ea.	6.97
18	835682	15" Brush Release Button Assembly	1 set	3.93
	835705	12" Brush Release Button Assembly	1 set	3.74
19	834810	15" Side Base Bumper	1 ea.	3.86
	835036	12" Side Base Bumper	1 ea.	4.00
20	835675	Center Wheel Pivot Rod Assembly	1 set	4.15
21	834791	Center Wheel	1 ea.	5.39
22	835349	LED Strip Light Harness Assembly	1 ea.	19.82
23	834816	LED Strip Light Lens	1 ea.	3.47
24	835680	15" Front Base Plate Assembly	1 set	10.64
	835703	12" Front Base Plate Assembly	1 set	9.56
25	834809	15" Front Base Bumper	1 ea.	11.75
	835035	12" Front Base Bumper	1 ea.	9.17
26	835679	Base Wire Brace	1 set	4.59
27	841818	15" Brush Roller	1 ea.	20.65
	841817	12" Brush Roller	1 ea.	19.74
28	835681	15" Rear Base Plate Assembly	1 set	6.05
	835704	12" Rear Base Plate Assembly	1 set	5.67
29	835678	Timing Belt Assembly	1 set	33.89
30	835685	15" Pulley Assembly	1 set	20.95
	835706	12" Pulley Assembly	1 set	17.17
31	835677	Brush Roller Clutch Assembly	1 set	51.44

PROGEN 12 / 15 PARTS

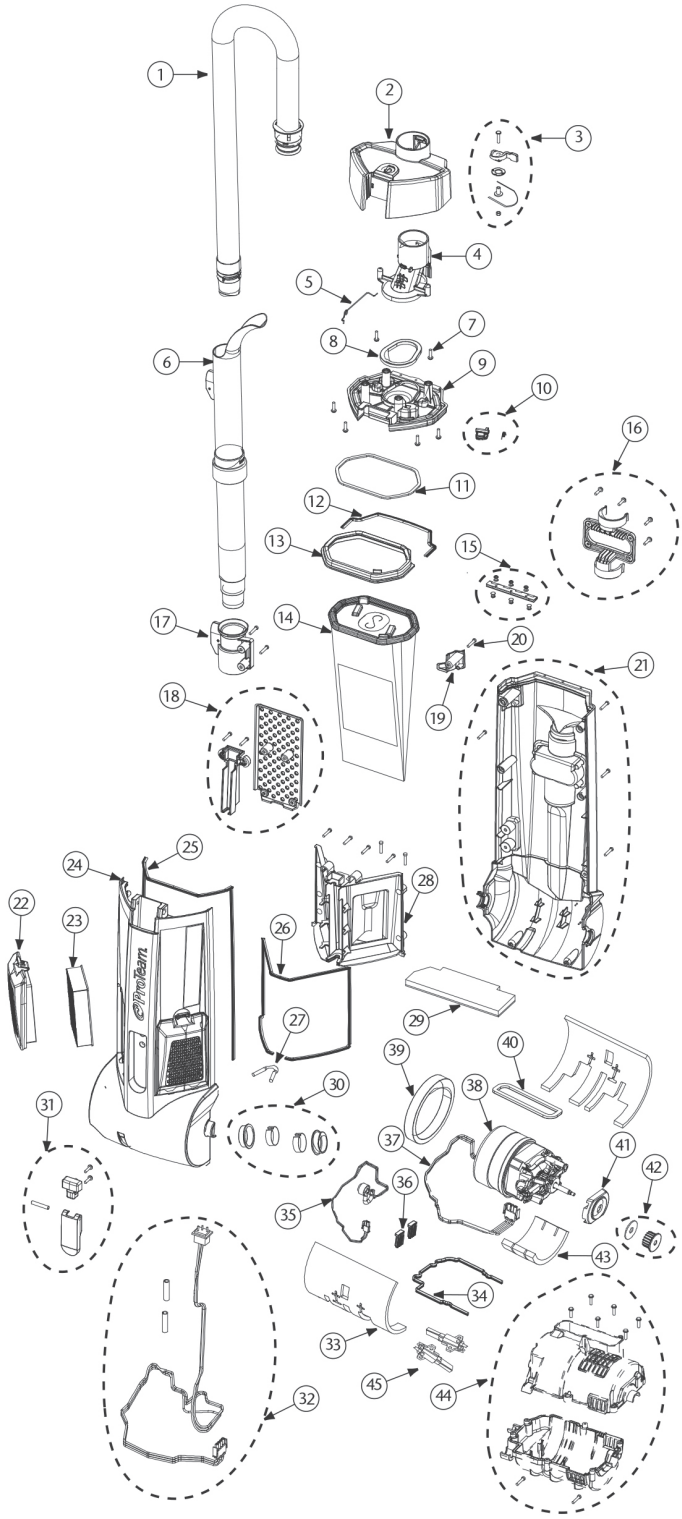

	No.	Product Name	Qty	List Price
1	510259	Hose Assembly	1 ea.	$24.76
2	835354	Filter Cover Assembly	1 ea.	9.91
3	835696	Filter Lid Cam Lock Assembly	1 set	12.92
4	834688	Upright Transition Duct Assembly	1 ea.	6.50
5	834753	Filter Housing Spring Hose	1 ea.	2.47
6	510258	Extension Tube Assembly	1 ea.	11.08
7	835345	Washer Pan Screw M4	1 ea.	3.86
8	834691	Transition Duct Gasket	1 ea.	3.09
9	834687	Bag Cover Housing Plate	1 ea.	7.88
10	835697	Bag Cover Housing Interlock Assembly	1 ea.	2.55
11	834690	Bag Cover Gasket Plate	1 ea.	3.63
12	834730-3	Lid Rear Tree Gasket	1 ea.	2.32
13	834823	Bag Housing Rim	1 ea.	3.74
14	107377	Intercept Micro Filter,10 pack	10/pk	32.60
15	835698	Hinge with Rivet Assembly	1 set	9.32
16	835694	Carry Handle w/Tool Caddy Assembly	1 set	4.53
17	835351	Power Nozzle Adaptor Hose	1 set	5.67
18	835690	Filter Housing Harness Enclosure Assembly	1 set	5.29
19	834724	Extension Handle Clip	1 ea.	2.68
20	835358	Pan Screw M4 20mm	1 ea.	5.39
21	835693	Rear Bag Housing Assembly	1 set	32.38
22	834717	Exhaust Filter Cover	1 ea.	9.71
23	107005	Exhaust Filter made from HEPA Media	1 ea.	11.03
24	835687	15" Front Bag Housing	1 ea.	31.15
	835708	12" Front Bag Housing	1 ea.	31.15
25	834730	Bag Housing Tree Gasket	1 ea.	3.63
26	834730-1	Filter Housing Tree Gasket	1 ea.	2.94
27	835150	Filter Housing Gasket Separator	1 ea.	2.08
28	834718	Filter Housing Separator	1 ea.	12.74
29	834721	Motor Intake Filter	1 ea.	2.86
30	835695	Bag Housing Pivot Sleeve Assembly	1 set	4.48
31	835688	Lower Cord Wrap Bracket Assembly	1 set	4.37
32	835689	Filter Housing Harness Assembly	1 set	15.57
33	834722	Foam Filter Housing	1 ea.	4.98
34	834730-2	Motor Housing Tree Gasket	1 ea.	2.47
35	834723	Bag Full Indicator Sensor	1 ea.	15.27
36	840042	Motor Support Gasket	1 ea.	3.09
37	835344	Motor Harness	1 ea.	9.56
38	834705	Motor Assembly (includes: 45)	1 ea.	127.72
39	834696	Blower Gasket Housing	1 ea.	5.39
40	834697	Inlet Motor Gasket	1 ea.	3.09
41	834701	Motor Mount Gasket	1 ea.	4.37
42	835692	Motor Pulley Assembly	1 set	3.69
43	834704	Foam Motor Housing	1 ea.	2.62
44	835691	Motor Housing Assembly	1 set	33.89
45	835714	Motor Brush	1 ea.	21.48

PROFORCE 1200XP / 1500XP PARTS

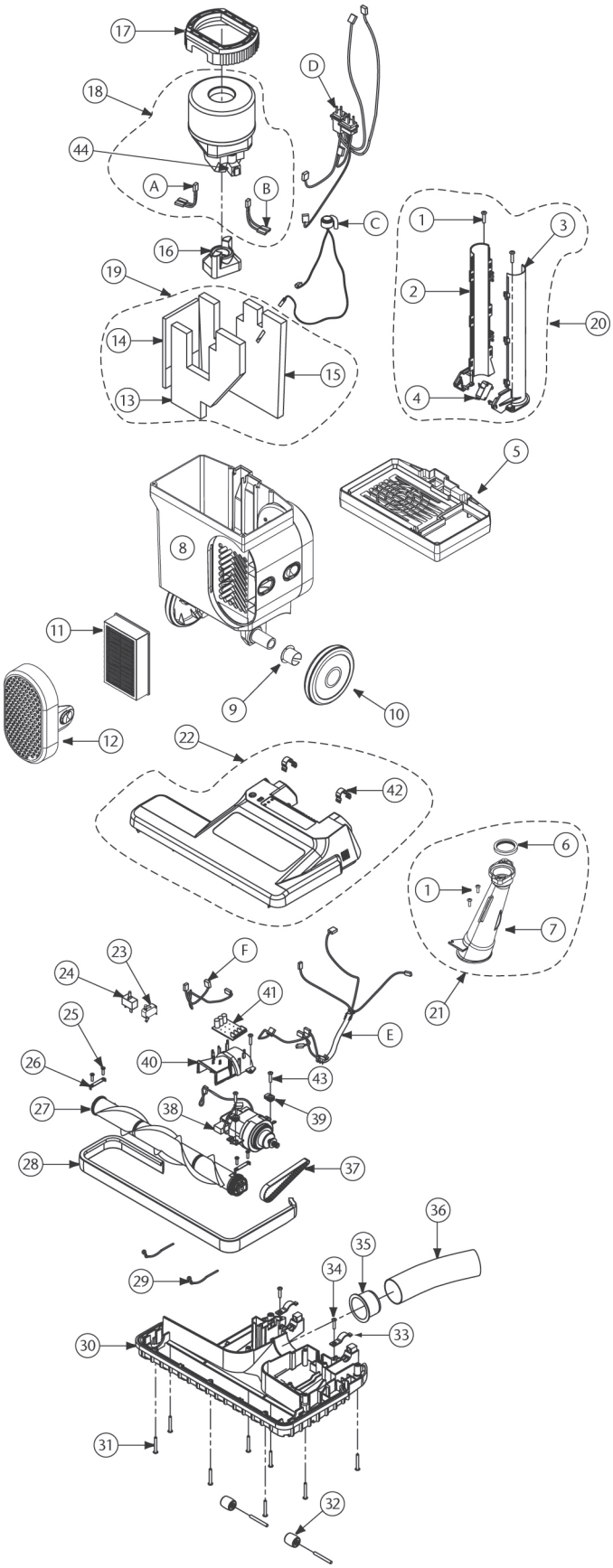

	No.	Product Name	Qty	List Price
1	104267	Phillips Screw, 4mm x 12mm for Lower Air Duct	2/pk	$12.86
2	104260	Upper Right Wand Guide	1 ea.	6.66
3	104261	Upper Left Wand Guide	1 ea.	6.66
4	104263	Wand Lockout Switch	1 ea.	15.63
5	107255	Bulkhead	1 ea.	29.25
6	104253	Lower Air Duct Seal	1 ea.	2.47
7	104250	Air Duct	1 ea.	20.63
8	107257	Motor Housing	1 ea.	68.83
9	104504	Pivot Bearing	2/pk	10.25
10	104306	Rear Wheel	2/pk	24.25
11	107005	Exhaust Filter made from HEPA Media	1 ea.	11.03
12	107258	Filter Cartridge Cover	1 ea.	9.99
13	103532	Front Panel Motor Housing Sound Foam	1 ea.	10.35
14	103533	Left Panel Motor Housing Sound Foam	1 ea.	6.07
15	103531	Rear Panel Motor Housing Sound Foam	1 ea.	14.55
16	104247	Lower Motor Mount	1 ea.	12.16
17	104249	Upper Motor Mount	1 ea.	20.63
18	104957	Motor Assembly w/Jumpers (includes: A, B)	1 kit	115.85
19	105488	Motor Housing Sound Filter (includes: 13,14,15)	1 kit	29.09
20	105490	Wand Kit (includes: 1, 2, 3, 4)	1 kit	24.39
21	105489	Air Duct Kit (includes: 1, 6, 7)	1 kit	21.85
22	107282	ProForce 1500XP Power Nozzle Cover with Detent Springs (includes: 42)	1 ea.	59.85
	107283	ProForce 1200XP Power Nozzle Cover with Detent Springs (includes: 42)	1 ea.	59.85
23	104279	Power Nozzle Lockout Safety Switch	1 ea.	26.15
24	104212	Circuit Breaker (reset button)	1 ea.	29.58
25	104496	Phillips Screw, 3.5mm x 13mm, for Brush Retainer	4/pk	10.12
26	104499	Brush Roll Retainer	2/pk	4.90
27	104216	14" Power Nozzle Brush Roll for ProForce 1500XP	1 ea.	46.05
	107163	12" Power Nozzle Brush Roll for ProForce 1200XP	1 ea.	46.05
28	104218	ProForce 1500XP Vinyl Power Nozzle Bumper	1 ea.	13.25
	107166	ProForce 1200XP Vinyl Power Nozzle Bumper	1 ea.	13.25
29	104500	Formed Wire Brace for Power Nozzle Base	2/pk	4.90
30	104221	ProForce 1500XP Power Nozzle Baseplate	1 ea.	92.24
	107167	ProForce 1200XP Power Nozzle Baseplate	1 ea.	87.12
31	104497	Phillips Screw, 4mm x 35mm for Base Cover	8/pk	11.49
32	834363	Wheel/Axle Replacement Kit	1 kit	13.69
33	104503	Rear Wheel Clamp	1 set	8.49
34	104495	Phillips Screw, 4mm x 19mm for Powerhead	5/pk	6.66
35	104227	Air Duct Hose Sleeve	1 ea.	4.90
36	104230	Power Nozzle to Air Duct Lower Hose	1 ea.	11.25
37	104217	Brush Roll Drive Belt	1 ea.	8.81
38	104506	Power Nozzle Motor with Crimps	1 ea.	143.33
39	104498	Power Nozzle Motor Vibration Grommet	2/pk	4.90
40	104224	Power Nozzle Air Duct Cover	1 ea.	9.16
41	104226	Vacuum Operation Indicator Board	1 ea.	17.62
42	104507	Detent Upright Lock Spring	2/pk	5.31
43	105371	Phillips Screw, 4.2mm x 19mm, for Power Nozzle Motor	2/pk	4.48
44	105281	Carbon Brush Set for ProForce Motor	1 set	31.82
	105754	Wire Harness Kit includes:	1 set	62.78
		A. Red Jumper Harness	B. White Jumper Harness	
		C. Full Bag Indicator Sensor	D. Main Power Supply Harness	
		E. Power Nozzle Wire Harness	F. Power Nozzle Switch Harness	

PROFORCE 1200XP / 1500XP PARTS

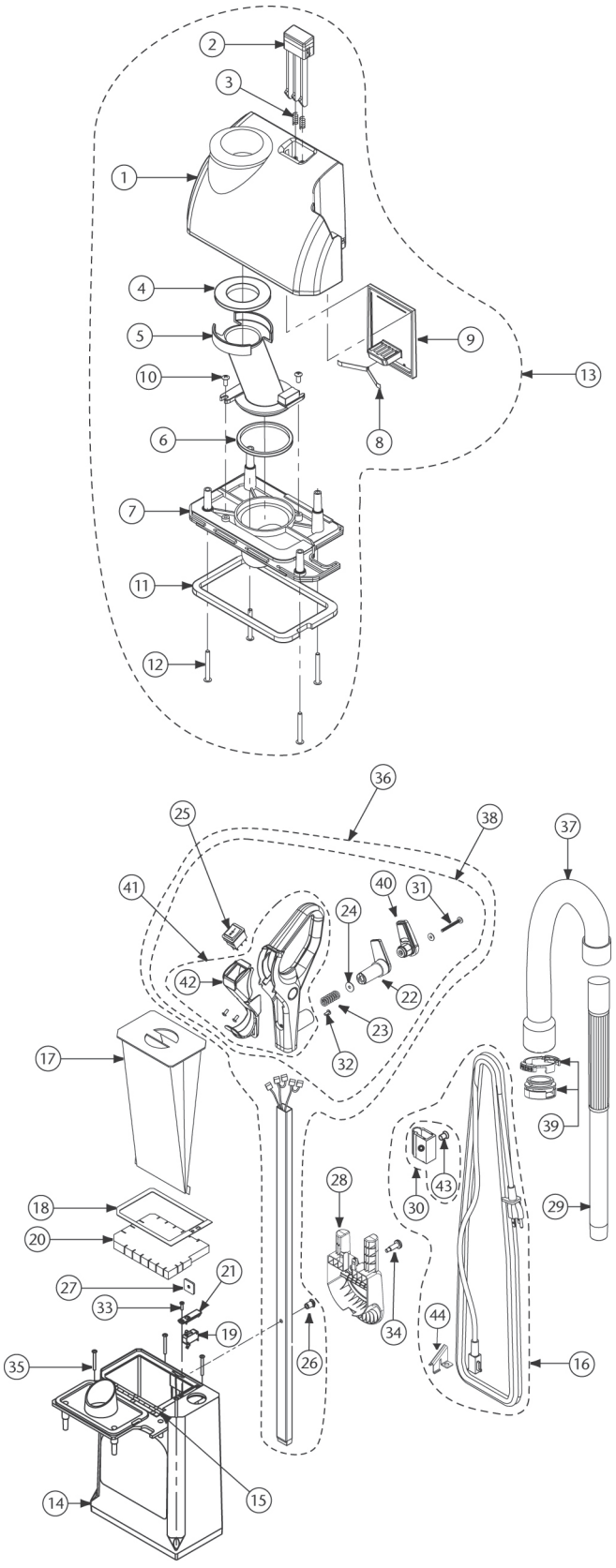

	No.	Product Name	Qty	List Price
1	104234	Grey Bag Housing Cover	1 ea.	$33.08
2	104232	Bag Cover Release Latch	1 ea.	8.83
3	104233	Release Latch Button Spring for Bag Cover	2/pk	4.48
4	104235	Upper Seal Transition Duct for Bag Cover	1 ea.	7.73
5	104236	Transition Duct Bag Cover	1 ea.	13.25
6	104238	Lower Seal Transition Duct Bag Cover Nozzle Plate	1 ea.	4.48
7	104239	Bag Cover Nozzle Plate	1 ea.	10.35
8	104242	Bag Cover Latch Spring	1 ea.	6.66
9	104243	Bag Cover Latch Plate	1 ea.	4.90
10	104505	Phillips Screw, 4mm x 9.5mm	2/pk	4.48
11	104241	Bag Cover Gasket	1 ea.	4.90
12	104493	Phillips Screw, 4.2mm x 35mm	4/pk	8.15
13	105486	Filter Cover Kit w/Riveted Hinge and 6 Rivets (includes: 1-12)	1 kit	87.21
14	107260	ProForce 1500XP Bag Housing Assembly with Riveted Hinge & Bag Cover Nozzle Plate	1 ea.	79.28
	107285	ProForce 1200XP Bag Housing Assembly with Riveted Hinge & Bag Cover Nozzle Plate	1 ea.	79.28
15	104491	Rivet for Bag Housing Assembly	6/pk	6.66
16	104284	50' Yellow Power Cord with Strain Relief (includes: 30, 44)	1 ea.	78.00
17	103483	Intercept Micro Filter	10/pk	25.69
18	104738	Bag Housing Gasket Seal	1 ea.	4.90
19	104283	Lock-Out Filter Switch	1 ea.	16.45
20	104281	Double Layer Motor Intake Filter	1 ea.	5.78
21	104282	Lock-Out Filter Switch Cover	1 ea.	4.90
22	104268	Cord Wrap Bracket	1 ea.	8.83
23	104269	Cord Wrap Compression Bracket Spring	1 ea.	4.90
24	104270	Cord Wrap Bracket Compression Spring Washer	1 ea.	2.26
25	105147	On/Off Rocker Switch	1 ea.	26.47
26	104264	Handle Tube Bushing	1 ea.	2.47
27	104259	Handle Nut Plate	1 ea.	2.47
28	107256	Carry Handle with Tool Caddy	1 ea.	11.05
29	104294	Wand	1 ea.	29.09
30	105091	Strain Relief Kit with Fastener Clip (includes: 43)	1 ea.	12.16
31	104271	Phillips Head Screw for Cord Wrap, M4 x 45mm	1 ea.	4.48
32	104509	Phillips Screw, 4mm x 16mm x .07 Pitch, for Handle Assembly	1 ea.	4.48
33	105075	Phillips Screw, 2.9mm x 13mm, for Switch Cover	1 ea.	7.92
34	104266	Handle Assembly Screw	1 ea.	2.75
35	104493	Phillips Screw, 4.2mm x 35mm	4/pk	8.15
36	106618	Tube Handle Assembly Complete (includes: 26, 38)	1 ea.	119.91
37	104961	Hose Assembly with Cuffs (includes: 39)	1 ea.	84.80
38	106617	Handle Kit (includes: 22-25, 31, 32, 40-42)	1 kit	79.28
39	105573	Quick Release Hose Cuff	1 ea.	32.84
40	107093	Impact Bumper	1 ea.	5.09
41	106619	Handle/Bezel Assembly (includes: 42)	1 ea.	48.34
42	106739	Handle Bezel	1 ea.	15.78
43	105320	Fastener	1 ea.	7.55
44	107203	Cord Retention Clip	1 ea.	5.64

LINEVACER PARTS

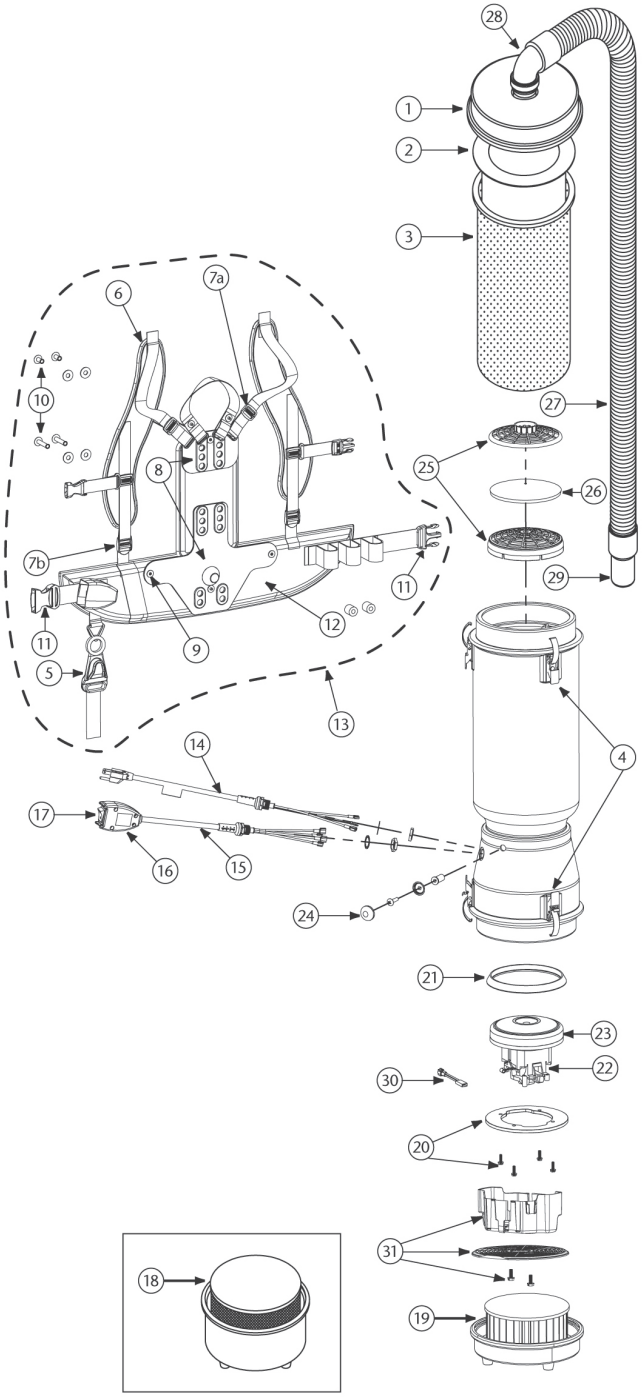

	No.	Product Name	Qty	List Price
1	104276	Latch Cap w/Cuff (Black)	1 ea.	$ 98.56
2	100291	Intercept Micro Filter	10/pk	51.22
3	100565	Micro Cloth Filter	1 ea.	56.34
4	100286	Top or Bottom Cap Latch Set: 3 Latches, 3 Locks w/6 Fastening Rivets, 6 Washers	1 set	73.73
5	510738	Cord Holder	1 ea.	5.09
6	100356	Shoulder Strap Assembly (includes: 7a, 7b)	1 set	32.46
	100354	Strap Assembly Complete (includes: 6, 12)	1 set	99.83
7a	100358	Shoulder Strap Plastic Adjustment (Top)	1 ea.	1.54
7b	100357	Shoulder Strap Plastic Adjustment (Bottom)	1 ea.	1.93
8	105046	Backplate (includes: 9)	1 ea.	49.91
9	100375	Barrel Nut Connection Set for Backplate (Replacement)	1 set	8.99
10	100374	Backplate Connection Set: 4 Screws w/Washers, Stand Offs	1 set	24.96
11	106719	Waist Belt Keeper and Latch	1 ea.	22.64
12	100359	Waist Belt (includes: 11)	1 ea.	74.84
13	103166	Backplate System Complete (includes: 5-12)	1 set	124.76
14	100641	Power Cord Assembly Complete	1 set	36.21
15	101610	Switch Cord Assembly 120V (includes: 16, 17)	1 set	69.91
	101714	Switch Cord w/Crimps	1 ea.	31.00
16	101472	Switch Box w/Velcro and New Lamb Switch	1 set	44.92
	106287	Switch Box w/Velcro and Screws	1 ea.	33.54
17	106066	On/Off Switch (must use with #106287)	1 ea.	13.61
18	104275	ULPA Filter Assembly Complete w/Bottom Cap (100280, 100282)	1 set	507.87
19	104274PT	HEPA Filter Assembly Complete w/Bottom Cap (100277, 100279)	1 set	367.87
20	100335	Motor Compression Ring w/Screws	1 set	24.01
	100378	Compression Ring Screw Set: 4 Screws	1 set	4.50
21	100014	Motor Gasket	1 ea.	22.52
100297		Gasket Ring (Not Shown)	1 ea.	7.84
22	105697	Carbon Brush Set (Domel Motor)	1 set	31.82
	100424	Carbon Brush Set (Ametek Motor) (116311-00)	1 set	31.82
	106904	Carbon Brush Set (Ametek Motor) (122157-00)	1 set	31.82
23	100422	Motor/Fan (120 V) w/Crimps (Ametek Motor)	1 ea.	137.90
	100380	Motor Crimp Set: 4 female, 4 Male and a Ground Crimp Connector	1 set	15.94
	100379	Motor Ground, Wire Clamp Set w/Screws	1 set	8.99
24	100368	Motor Mounting System Set: 3 Well Nuts, 3 Bolts, 3 Washers, 3 Covers	1 set	24.96
25	100030	Dome Filter w/Foam Media	1 ea.	15.03
26	100343	Foam Filter Media for Dome Filter	1 ea.	2.77
27	107648	48" Static-Dissipating Hose w/ Non-Replaceable Elbow and Straight Cuffs	1 ea.	41.57
28	101928	Replacement Double Swivel Elbow Cuff	1 ea.	17.27
29	100694	Replacement Double Swivel Straight Cuff	1 ea.	10.30
30	107294	Thermal Protector	1 ea.	21.85
31	105044	Motor Shroud/Diffuser w/Screw Set: 2 Screws	1 set	42.79
	101678	50' Extension Cord (Not Shown)	1 ea.	63.96

PROBLITZ AIRMOVER PARTS

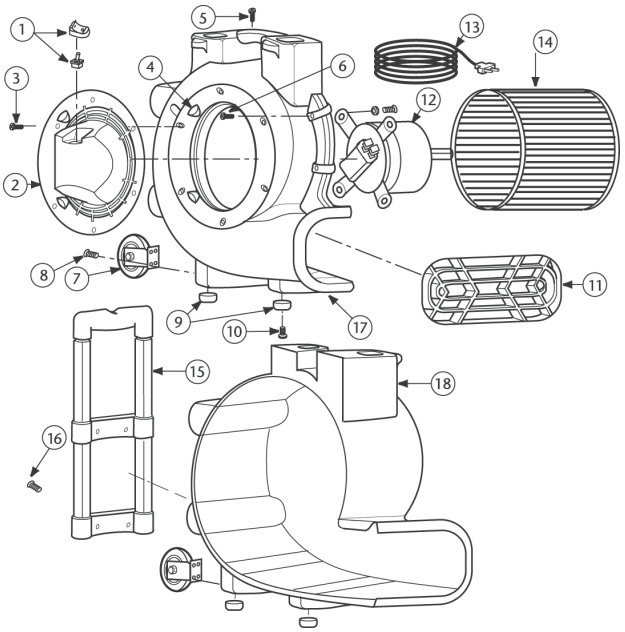

	No.	Product Name	Qty	List Price
1	510141	Switch & Knob Assembly	1 ea.	$ 13.45
2	833658	Inlet Grill	1 ea.	10.05
	510551	Inlet Grill with Outlets (ProBlitz XP)	1 ea.	20.07
3	820563-7	Screw, Type AB #10 x ¾"	1 ea.	0.73
4	833673	Threaded Inserts - Housing	1 ea.	10.73
5	820563-7	Screw, Type AB #10 x ¾"	1 ea.	0.73
6	820563-13	Screw, Type AB #10 x 1"	1 ea.	0.73
7	510140	Wheel Assembly (ProBlitz XP)	1 ea.	20.58
8	820563-7	Screw, Type AB #10 x ¾" (ProBlitz XP)	1 ea.	0.73
9	833690	Foot Bumper (Only four (4) required for ProBlitz XP)	1 ea.	12.08
10	820563-7	Screw, Type AB #10 x ¾" (Only four (4) required for ProBlitz XP)	1 ea.	0.73
11	833659	Exhaust Grill	1 ea.	8.46
12	833674	Motor	1 ea.	213.79
13	833675	30' Cord w/Plug	1 ea.	50.05
	841368	25' Cord w/Plug (ProBlitz XP)	1 ea.	78.00
14	833660	Blower Wheel	1 ea.	46.40
15	833691	Retractable Handle (ProBlitz XP)	1 ea.	56.41
16	820563-7	Screw, Type AB #10 x ¾" (ProBlitz XP)	1 ea.	0.73
17	833657-1	Housing (left side)	1 ea.	33.46
18	833656-1	Housing (right side)	1 ea.	47.61

PROGUARD 4 PORTABLE PARTS

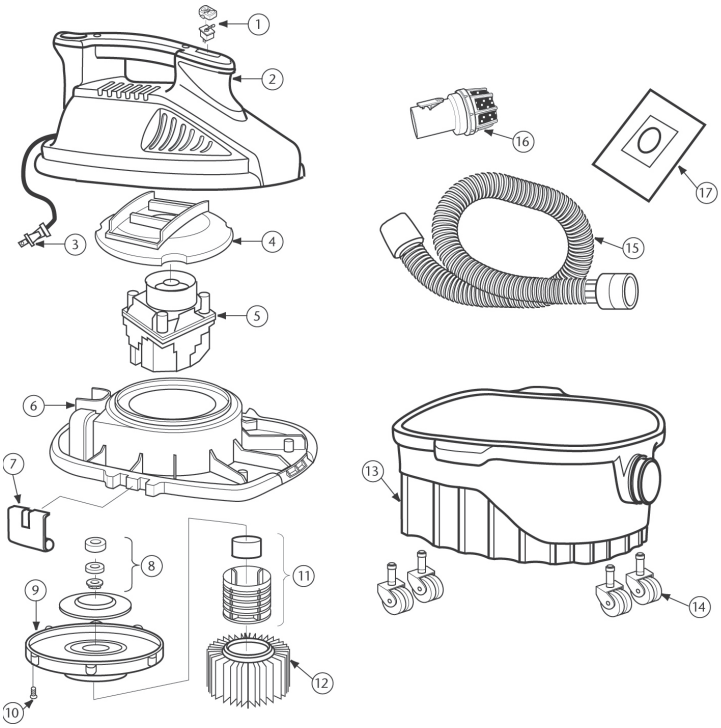

	No.	Product Name	Qty	List Price
1	510224	Switch and Switch Cover	1 ea.	$ 5.80
2	510225	Motor Cover and Top Handle	1 ea.	45.64
3	829719-4	Cord Assembly	1 ea.	19.71
4	830519	Exhaust Duct	1 ea.	14.42
5	509776-19	Motor Assembly	1 ea.	90.84
6	842668-2	Lid	1 ea.	53.38
7	826387	Tank Latch	1 ea.	10.50
8	510124	Blower Wheel, Washer, Spacer, Nut	1 ea.	9.06
9	832656-1	Plate Collector	1 ea.	13.45
10	820563-4	Screw, Type AB #10 x ¾"	1 ea.	0.73
11	510108	Filter Cage and Float Assembly	1 ea.	8.66
12	107178	Qwik Lock Fine Dust Cartridge Filter	1 ea.	28.61
13	510106	Tank (with Inlet)	1 ea.	21.86
14	510109	Casters	4/pk	11.03
15	831337-6	Premium Hose Assembly	1 ea.	61.87
16	830098	Diffuser	1 ea.	7.60
17	107182	Intercept Micro Filter Bag (optional)	3/pk	29.67

PROGUARD 10 PARTS

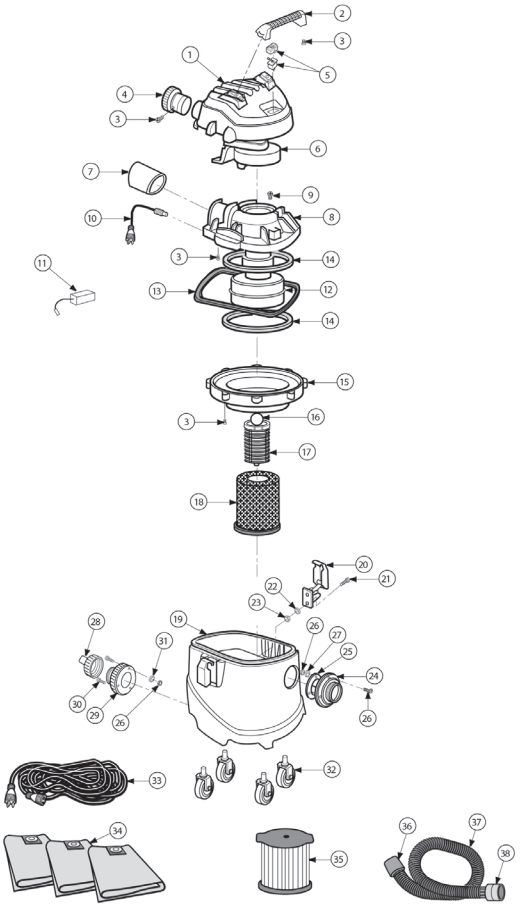

	No.	Product Name	Qty	List Price
1	510094	Motor Cover Assembly	1 ea.	$ 50.73
2	830565-2	Handle Motor Cover	1 ea.	3.55
3	820563-4	Screw Type AB #10 x ¾"	1 ea.	0.73
4	833600	Diffuser Assembly	1 ea.	8.29
5	510127	Switch Assembly	1 ea.	9.65
6	831651	Duct Motor Exhaust/Cooling Fan	1 ea.	9.20
7	830609	Exhaust Foam Pad	1 ea.	3.08
8	831653-3	Lid with Foam	1 ea.	22.67
9	826453-2	Screw 10-32 x ¾"	1 ea.	1.33
10	833417	Power Cord Assembly	1 ea.	41.38
11	822374-8	Carbon Brush Set	1 set	19.14
12	831567	Motor Assembly Complete	1 ea.	158.27
13	833518	Gasket Lid	1 ea.	16.32
14	827415	Gasket Motor	1 ea.	15.18
15	831659	Collector Assembly	1 ea.	13.96
16	833778	Ball Float	1 ea.	4.30
17	830101-1	Filter Cage	1 ea.	4.15
18	107177	Wet Filter	1 ea.	38.16
19	833601	Tank, 10 Gallon	1 ea.	292.76
20	833424-1	Drum Latch	1 ea.	12.10
21	833492-1	Screw 10-32 x ¾"	1 ea.	1.55
22	833493	Washer (13/64 ID) #10	1 ea.	1.54
23	161255-8	Nut Lock #10	1 ea.	1.46
24	833425	Tank Inlet Adapter	1 ea.	5.57
25	833426	Gasket Inlet Adapter	1 ea.	2.70
26	833492	Screw 1-32 x 1 ¼"	1 ea.	2.14
27	833493	Washer (13/64 ID) #10	1 ea.	1.54
28	73185	Drain Cap	1 ea.	11.03
29	833429	Drain Adapter with Gasket	1 ea.	11.25
30	833492-2	Screw 1-32 x 1 3/8"	1 ea.	1.79
31	833493	Washer (13/64 ID) #10	1 ea.	1.54
32	833431	Caster 3"	1 ea.	17.30
33	833432	50' Extension Cord	1 ea.	123.85
34	107181	Intercept Micro Filter	3/pk	40.09
35	107175	Qwik Lock Fine Dust Filter	1 ea.	38.16
36	831577	Swivel Hose Cuff	1 ea.	7.00
37	107198	Hose Assembly	1 ea.	63.46
38	833587	Locking Ring Cuff	1 ea.	16.02

PROGUARD 16 MD PARTS

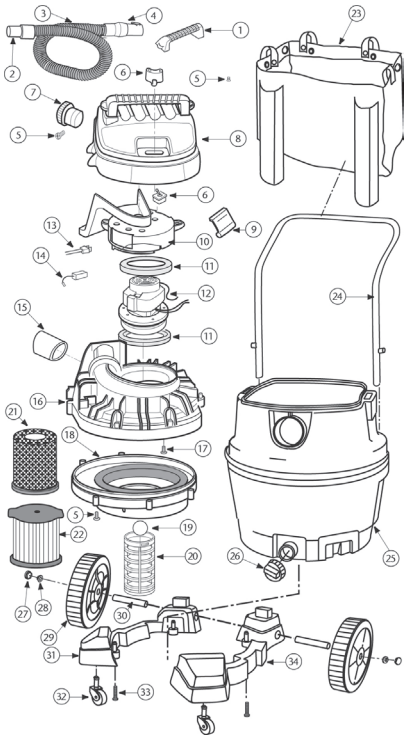

	No.	Product Name	Qty	List Price
1	830565-2	Handle Motor Cover	1 ea.	$ 3.55
2	831577	Swivel Hose Cuff	1 ea.	7.00
3	831337-6	Hose Assembly w/Cuffs	1 ea.	61.87
4	829900	Locking Ring Cuff	1 ea.	6.80
5	820563-4	Screw Type AB #10 x ¾"	1 ea.	0.73
6	510127	Switch Assembly	1 ea.	9.65
7	833600	Diffuser Assembly	1 ea.	8.29
8	510286	Motor Cover Assembly	1 ea.	53.72
9	826387	Drum Latch	1 ea.	10.50
10	831651	Duct Motor Exhaust/Cooling Fan	1 ea.	9.20
11	827415	Gasket Motor	1 ea.	15.18
12	831567	Motor Assembly Complete	1 ea.	158.27
13	831657-1	Power Cord Assembly	1 ea.	110.50
14	822374-8	Carbon Brush Set	1 set	19.14
15	830609	Exhaust Foam Pad	1 ea.	3.08
16	831653-1	Lid	1 ea.	28.32
17	826453-2	Screw 10-32 x ¾"	1 ea.	1.33
18	831659	Collector Assembly	1 ea.	13.96
19	833778	Ball Float	1 ea.	4.30
20	830101-1	Filter Cage	1 ea.	4.15
21	107177	Quick Lock Wet Filter	1 ea.	38.16
22	107175	Qwik Lock Fine Dust Cartridge Filter	1 ea.	38.16
23	831668-1	Tote	1 ea.	29.90
24	830686	Handle	1 ea.	29.58
25	831660-2	Dust Drum Assembly	1 ea.	67.13
26	73185	Drain Cap	1 ea.	11.03
27	830611	Wheel Cap	1 ea.	2.03
28	813836-1	Cap Nut 1/2"	1 ea.	1.63
29	832190	8" Wheel Assembly (includes: 27, 28)	1 ea.	20.65
30	831024	Shaft	1 ea.	14.66
31	830577	Left Caddy	1 ea.	21.57
32	832123	Caster	1 ea.	23.81
33	820563-5	Screw Type "AB" #10 x 1-3/4"	1 ea.	1.62
34	830576	Right Caddy	1 ea.	18.45
	509944	Bag of Loose Parts (Not Shown) (includes: 27, 28, 32, 33)	1 kit	37.90

PROGUARD 15 / 20 PARTS

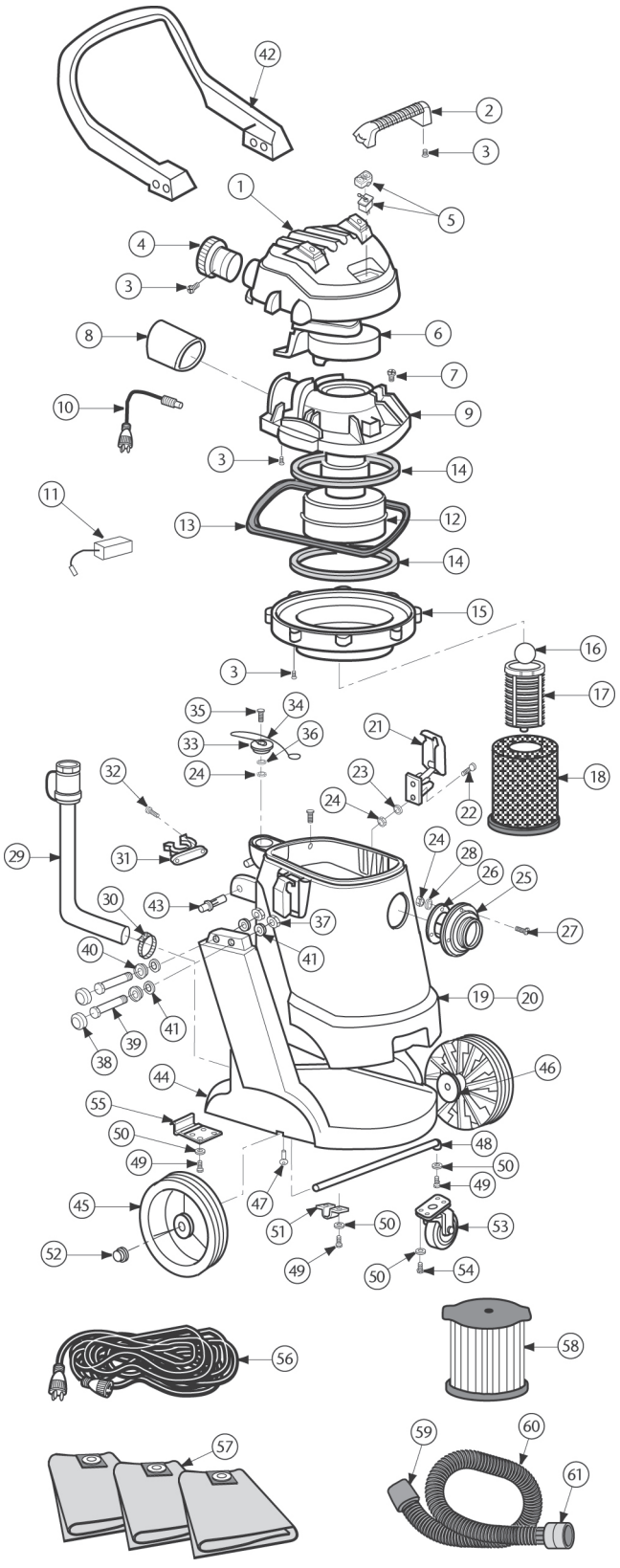

	No.	Product Name	Qty	List Price
1	510097	Motor Cover Assembly (ProGuard 15)	1 ea.	$ 47.47
	510104	Motor Cover Assembly (ProGuard 20)	1 ea.	40.26
2	830565-2	Handle Motor Cover	1 ea.	3.55
3	820563-4	Screw Type AB #10 x ¾"	1 ea.	0.73
4	833600	Diffuser Assembly	1 ea.	8.29
5	510127	Switch Assembly	1 set	9.65
6	831651	Motor Exhaust Duct	1 ea.	9.20
7	826453-2	Screw 10-32 X ¾"	1 ea.	1.33
8	830609	Exhaust Foam Pad	1 ea.	3.08
9	831653-3	Lid	1 ea.	22.67
10	833417	Power Cord Assembly	1 ea.	41.38
11	822374-8	Carbon Brush Set	1 set	19.14
12	831567	Motor Assembly Complete	1 ea.	158.27
13	833518	Gasket Lid	1 ea.	16.32
14	827415	Gasket Motor	1 ea.	15.18
15	831659	Collector Assembly with Foam	1 ea.	13.96
16	833778	Ball Float	1 ea.	4.30
17	830101-1	Filter Cage	1 ea.	4.15
18	107177	Wet FIlter	1 ea.	38.16
19	833603	20 Gallon Tank	1 ea.	285.80
20	833602	15 Gallon Tank	1 ea.	300.94
21	833424-1	Drum Latch	1 ea.	12.10
22	833492-1	Screw 10-32 X ¾"	1 ea.	1.55
23	833493	Washer (13/64 ID) #10	1 ea.	1.54
24	161255-8	Nut Lock #10	1 ea.	1.46
25	833425	Tank Inlet Adapter	1 ea.	5.57
26	833426	Gasket Inlet Adapter	1 ea.	2.70
27	833492	Screw 10-32 X 1 ¼"	1 ea.	2.14
28	833493	Washer (13/64 ID) #10	1 ea.	1.54
29	833451	Hose Drain Assembly 30" (includes: 30)	1 ea.	33.37
30	833452	Hose Clamp	1 ea.	5.19
31	826881	Hose Clip	1 ea.	1.69
32	808872-2	Screw 10-32 X 1 ¼"	1 ea.	1.83
33	833449	Cap Rubber Drum Pour Spout	1 ea.	8.33
34	833450	Pour Spout Cable Lanyard	1 ea.	9.28
35	833492	Screw 10-32 X 1 ¼"	1 ea.	2.14
36	833493	Washer (13/64 ID) #10	1 ea.	1.54
37	161255-2	Nut Lock 3/8-16	1 ea.	1.56
38	100371	Cap	1 ea.	1.07
39	832397-1	Screw Hex 3/8-16 X 3 ¾"	1 ea.	6.72
40	833779	Cap Retainer	1 ea.	1.69
41	805557-1	Washer 13/32 ID	1 ea.	1.63
42	833465	Cart Base Handle	1 ea.	165.27
43	833454	Drum Hinge Bushing	1 ea.	3.26
44	833456	Cart Base	1 ea.	338.70
45	833459	10" Wheel	1 ea.	20.65
46	833460	Wheel Spacer	1 ea.	3.73
47	833662	Thumb Screw	1 ea.	4.52
48	831024-3	Shaft Tube	1 ea.	7.53
49	805466-3	Screw Hex HD 5/16-18 X 5/8"	1 ea.	1.33
50	140755-12	Lock Washer Ext 5/16"	1 ea.	1.47
51	833461	Axle Bracket	1 ea.	5.39
52	813836-1	Nut Washer Cap	1 ea.	1.63
53	833462	4" Caster w/Bearings	1 ea.	32.10
54	805466-3	Screw Hex HD 5/16-18 X 5/8"	1 ea.	1.33
55	833463	Plate Pedal Lock	1 ea.	12.71
56	833432	50' Extension Cord	1 ea.	123.85
57	107180	Intercept Micro Filter	3/pk	58.20
58	107175	Qwik Lock Fine Dust Filter	1 ea.	38.16
59	831577	Swivel Hose Cuff 1½"	1 ea.	7.00
60	107198	Hose Assembly	1 ea.	63.46
61	833587	Locking Ring Cuff	1 ea.	16.02
	510142	Bag of Loose Parts (Not Shown) (includes: 37-41)	1 set	16.23

INDEX

Part No.	Product Name	Page No(s).
73185	Drain Cap	42
100014	Motor Gasket	32, 33, 34, 40
100030	Dome Filter w/Foam Media	26, 32, 33, 34, 40
100078	Attachment Kit A	18
100083	Floor Tool w/Adjustable Nylon Brush	22, 28
100084	Replacement Brush - 11" Floor Tool -100083	28
100093	Replacement Brush - 16" Floor Tool (100092PT)	28
100099	Replacement Nut - Aluminum Wands (100102, 100104, 101338, 106290)	28
100100	Replacement Ring - Aluminum Wands (100102, 100104, 101338, 106290, 106293)	28
100101	Replacement Sleeve - Aluminum Wands (100102, 100104, 101338, 106290)	28
100102	56" One-Piece, Two-Bend Aluminum Wand	21, 28
100104	60" Straight Extension Aluminum Wand	21, 28
100108	17" Crevice Tool	18, 19, 20, 24
100110	3" Dust Brush	18, 19, 20, 24
100112	Reducer Cuff 1¼" to 1½"	24, 28
100113	1" to 4" Overhead Pipe Cleaner	24
100114	4" to 8" Overhead Pipe Cleaner	24
100115	5" Upholstery Tool	18, 19, 20, 24, 28
100116	Replacement Nylon Brush - 5" Upholstery Tool -100115	28
100117	11" Turbo Brush Tool	18, 21, 22, 28
100135	Turbo Brush Kit	18
100136	54" One-Bend Chrome Tapered Wand	18, 21, 22, 23
100137	Replacement Nut - Aluminum Wand -106293	28
100141	Replacement Bumper – 14" Floor Tool -100147	28
100144	Hard Floor Tool w/Scalloped Felt Brush	18, 23, 28
100145	Replacement Felt - 14" Floor Tool – Straight -106194	28
100146	Replacement Felt, Scalloped - 14" Floor Tool (100144 , 106194)	28
100147	14" Floor Tool w/Scallops	18, 19, 20, 22, 28
100150	36" One-Bend Bulk Pick-Up Tool	18, 20, 24
100155	12" Aluminum Gulper Floor Tool	19, 22
100163	High Filtration Vac Kit 1 ½"	12, 20
100167	13" Curved Chrome Wand	21
100197	Twist Cap (Purple)	32
100286	Top or Bottom Cap Latch Set: 3 Latches, 3 Locks w/6 Fastening Rivets, 6 Washers	40
100291	Intercept Micro Filters, (Closed Collar) fits LV, SCV, MV	12, 25, 40
100297	Gasket Ring	40
100320	Twist Cap (Black) (MV)	34
100331	Intercept Micro Filters, (Open Collar) fits SCV, MV	25, 32, 34
100335	Motor Compression Ring w/Screws	32, 33, 34, 40
100343	Foam Filter Media for Dome Filter for SQV, SCV, MV, LV, AV	26, 32, 33, 34, 40
100354	Strap Assembly Complete	32, 33, 34, 40
100356	Shoulder Strap Assembly	32, 33, 34, 40
100357	Shoulder Strap Plastic Adjustment (Bottom)	32, 33, 34, 40
100358	Shoulder Strap Plastic Adjustment Buckle (Top)	32, 33, 34, 40
100359	Waist Belt	32, 33, 34, 40
100368	Motor Mounting System Set	32, 33, 34, 40
100371	Cap	43
100374	Backplate Connection Set: 4 Screws w/Washers, Stand Offs	34, 40
100375	Barrel Nut Connection Set for Backplate (Replacement)	32, 33, 34, 40
100378	Compression Ring Screw Set: 4 Screws	32, 33, 34, 40
100379	Motor Ground Connection and Wire Clamp Set w/Screws	32, 33, 34, 40
100380	Motor Crimp Set	32, 33, 34, 40
100422	Motor/Fan (120 V) w/Crimps (Ametek Motor)	40
100424	Carbon Brush Set (Ametek Motor) (116311-00)	40
100431	Intercept Micro Filters, fits SQV, QP BP, AV	25, 33
100505	Static-Dissipating Hose w/Straight Cuffs	29, 30, 31
100564	Micro Cloth Filter for SQV, QP BP, AV	25, 33
100565	Micro Cloth Filter for SCV, MV, LV	25, 32, 34, 40
100586	Bottom Bumper	32, 33
100597	Sound Muffler for Super CoachVac, MegaVac	26, 32, 34
100598	Squeegee Blades for 107199 Tool	28
100614	Hard Floor Tool w/Nylon & Horse Hair Blend Brush	18, 20, 23, 28
100623	Hard Floor Tool w/Nylon Brush	18, 19, 20, 23, 28
100641	Power Cord Assembly Complete w/Strain Relief	32, 33, 34, 40
100694	Replacement Swivel Cuff (Black) 1½"	29, 30, 31, 32, 33, 34, 35, 40
100713	Replacement Nylon Brush - 14" Floor Tool -100623	28
100714	Replacement Nylon Horse Hair Blend Brush w/Brush, Washer and Screw -100614	28
100716	Backplate (Black) Connection Set: 4 Screws w/Washers	32, 33
100719	Logo Banner	27
100727	Restaurant Kit	4, 13, 19
100730	Paddle Tool	22
101092	Reducer Cuff 1½" x 1¼" For Hose	28
101155	Replacement Nylon Brush - E-Z Glide 14" Floor Tool -101446	28
101220	High Filtration Discs for Dome Filter, One Pack of Two	26, 32, 33, 34
101338	56" Two-Piece, Two-Bend Aluminum Wand	2, 3, 4, 8, 9, 18, 19, 20, 21, 28
101445	Retro Kit - 14" E-Z Glide Floor Tool	28
101472	Switch Box w/Velcro and New Lamb Switch	32, 33, 34, 40
101473	Repair Clip with Screws - 14" Hard Floor Tool w/Nylon Brush -100623	28
101475	Repair Kit - Felt Floor Tools: Support Bars and Screws	28

Part No.	Product Name	Page No(s).
101532	50 Sleeves (1 pack of 50)	27
101533	500 Sleeves (10 packs of 50)	27
101543	Filter Guard	32, 34
101610	Switch Cord Assembly 120V	32, 33, 34, 40
101611	Velcro Cord Strap	27
101613	JetSweep 20 Hard Floor Tool w/Nylon Brush	7, 23, 28
101678	50' 16-Gauge Extension Cord (Yellow)	27, 29, 31, 32, 33, 34, 40
101714	Switch Cord w/Crimps	32, 33, 34, 40
101720	Carbon Brush Set (Ametek Motor)	31, 32, 33, 34
101829	Hard Surface Flooring Kit A	8, 9, 18
101880	Replacement Nylon Brush - JetSweep 20, 20" Hard Floor Tool, Set of Two -101613	28
101928	Replacement Double Swivel Elbow Cuff 1½"	29, 30, 31, 32, 33, 34, 35, 40
101949	Foam Filter Media for Dome Filter for QP CN HEPA, RV, PV CN	26
102266	Two-Piece, One-Bend, Friction-Fit Wand	20, 21, 22
102361	17" Straight Plastic Wand	18
102399	Vibrating Upholstery Tool	18
102659	Long Dust Brush	24
102663	Mesh Bag	18
102684	Electronic Cleaning Kit	18
102715	Replacement Double Swivel Elbow Cuff 1¼"	35
102761	High Filtration Discs for Dome Filter for RV, QP CN, PV CN	26
102784	Dome Filter w/ Filter Media for Canisters	26
103071	Mounting Hardware Complete	27
103084	Natural Fiber Hard Floor Tool	23, 28
103085	12" Carpet Tool w/ Scallops	22
103086	13" Crevice Tool	19, 24
103087	Upholstery Tool w/Removable Brush -103088	19, 24, 28
103088	Removable Brush - 5½" Upholstery Tool -103087	19, 24, 28
103089	Dust Brush, Rectangular 90/180° Swivel	18, 19, 24
103099	1¼" Adapter Cuff	18, 28
103115	Micro Cloth Filter for QuietPro CN HEPA, RunningVac, ProVac CN	25
103122	Wand Adapter	19, 28
103123	Exhaust/Sound Filter for RunningVac, ProVac CN	26
103166	Backplate (Black) System Complete	32, 33, 34, 40
103237	Static-Dissipating Hose w/Cuffs (Black) 1¼"	35
103279	Replacement Swivel Cuff (Black) 1¼"	35
103439	Pest Control Kit	3, 9, 18
103483	Intercept Micro Filters, fits ProForce	11, 25, 39
103505	13" Curved Chrome Wand	18, 21
103523	24" Crevice Tool (Flexi-Clean)	18
103531	Front Panel Motor Housing Sound Foam	38
103532	Left Panel Motor Housing Sound Foam	38
103533	Rear Panel Motor Housing Sound Foam	38
103608	Turbo Brush	20, 22, 28
103638	HEPA Filter Assembly w/Electrical Connector for QuietPro CN HEPA	25
103975	Brush Arm, Set of 2	28
104029	Vac Display Mannequin	27
104160	Floor Mat	27
104212	Circuit Breaker	38
104216	14" Power Nozzle Brush Roll for ProForce 1500XP	38
104217	Brush Roll Drive Belt	38
104218	ProForce 1500XP Vinyl Power Nozzle Bumper	38
104221	ProForce 1500XP Power Nozzle Baseplate	38
104224	Power Nozzle Air Duct Cover	38
104226	Vacuum Operation Indicator Board	38
104227	Air Duct Hose Sleeve	38
104230	Power Nozzle to Air Duct Lower Hose	38
104232	Bag Cover Release Latch	39
104233	Release Latch Button Spring for Bag Cover	39
104234	Grey Bag Housing Cover	39
104235	Upper Seal Transition Duct for Bag Cover	39
104236	Transition Duct Bag Cover	39
104238	Lower Seal Transition Duct Bag Cover Nozzle Plate	39
104239	Bag Cover Nozzle Plate	39
104241	Bag Cover Gasket	39
104242	Bag Cover Latch Spring	39
104243	Bag Cover Latch Plate	39
104247	Lower Motor Mount	38
104249	Upper Motor Mount	38
104250	Air Duct	38
104253	Lower Air Duct Seal	38
104259	Handle Nut Plate	39
104260	Upper Right Wand Guide	38
104261	Upper Left Wand Guide	38
104263	Wand Lockout Switch	38
104264	Handle Tube Bushing	39
104266	Handle Assembly Screw	39
104267	Screw, Phillips, 4mm x 12mm F/Lower Air Duct	38
104268	Cord Wrap Bracket	39

INDEX

Part No.	Product Name	Page No(s).
104269	Cord Wrap Compression Bracket Spring	39
104270	Cord Wrap Compression Bracket Spring Washer	39
104271	Phillips Head Screw for Cord Wrap	39
104275	ULPA Filter Assembly Complete w/Bottom Cap for LineVacer (Black)	25, 40
104276	Latch Cap w/Cuff (Black)	40
104279	Power Nozzle Lockout Safety Switch	38
104281	Double Layer Motor Intake Filter	26, 39
104282	Lock-Out Filter Switch Cover	39
104283	Lock-Out Filter Switch	39
104284	50' Yellow Power Cord with Strain Relief	39
104294	Wand	39
104306	Rear Wheel	38
104491	Rivet F/Bag Housing Assembly	39
104493	Screw, Phillips, 4.2mm x 35mm	39
104495	Screw, Phillips, 4mm x 19mm F/Powerhead	38
104496	Screw, Phillips, 3.5mm x 13mm, F/Brush Retainer	38
104497	Screw, Phillips, 4mm x 35mm F/Base Cover	38
104498	Power Nozzle Motor Vibration Grommet	38
104499	Brush Roll Retainer	38
104500	Formed Wire Brace for Power Nozzle Base	38
104503	Rear Wheel Clamp	38
104504	Pivot Bearing	38
104505	Screw, Phillips, 4mm x 9.5mm	39
104506	Power Nozzle Motor with Crimps	11, 38
104507	Detent Upright Lock Spring	38
104509	Screw, Phillips, 4mm x 16mm x 0.07 Pitch, F/Handle Assembly	39
104544	Intercept Micro Filters, fits QuietPro CN HEPA, RV, PV CN	25
104738	Bag Housing Gasket Seal	39
104832	Replacement Crevice Tool	24
104833	Combo Upholstery/Dust Brush	24
104885	1 1/4" Kit A	19
104957	Motor Assembly w/Jumpers	38
104961	Hose Assembly with Cuffs	39
104998	Bottom Twist Cap Gasket (MV)	34
105044	Motor Shroud/Diffuser w/Screw Set: 2 Screws	32, 33, 34, 40
105046	Backplate	32, 33, 34, 40
105070	Bottom Twist Cap (Black) (MV)	34
105075	Screw, Phillips, 2.9mm x 13mm, F/Switch Cover	39
105091	Strain Relief Kit with Fastener Clip	39
105136	ProForce Exhaust Filter (Older Side Access Model)	26
105147	On/Off Rocker Switch	35, 39
105162	Motor/Fan (120 V) w/Crimps	32, 33, 34
105164	Carbon Brush Set (Domel Motor)	32, 33, 34
105281	Carbon Brush Set for ProForce Motor	38
105320	Fastener	39
105371	Screw, Phillips, 4.2mm x 19mm, F/Power Nozzle Motor	38
105486	Filter Cover Kit w/Riveted Hinge and 6 Rivets	39
105488	Motor Housing Sound Filter	38
105489	Air Duct Kit	38
105490	Wand Kit	38
105573	Quick Release Hose Cuff	39
105691	18" Sidewinder Carpet Tool	19, 22
105692	18" Sidewinder Hard Floor Tool w/Nylon Brush	23
105693	59" Two-Piece Friction-Fit Aluminum Sidewinder Straight Wand	19, 21, 22, 23
105695	59" One-Piece Friction-Fit Aluminum Sidewinder Straight Wand	21, 22, 23
105697	Carbon Brush Set (Domel Motor)	40
105754	Wire Harness Kit	38
105800	Sound Muffler for Super QuarterVac, AviationVac	26, 33
105889	Hard Surface Flooring Kit C	8, 18
105891	Hard Surface Flooring Kit D	8, 18
106033	Wall Bracket and Screws	27
106064	Replacement Brush - 12" Floor Tool -103084	28
106066	On/Off Switch (Must be Used with 106287)	31, 32, 33, 34, 40
106073	Twist Cap (Purple)	33
106194	Hard Floor Tool w/ Felt Brush Scalloped & Flat	18, 23, 28
106245	15" Sidewinder Carpet Tool	19, 22
106246	15" Sidewinder Hard Floor Tool	19, 23
106261	6' Static Strap Kit (ProForce)	27
106287	Switch Box w/Velcro and Screws	32, 33, 34, 40
106293	49" Aluminum One-Piece, Two-Bend Wand	21, 22, 28
106343	24"-40" Chrome Telescoping Wand	18, 19, 21, 22, 23, 28
106345	Waist Belt Extension (10") Nifco	27
106346	Waist Belt Extension (18") Nifco	27
106502	Aviation 11/2" Kit #1	5, 19
106526	Dome Filter made from HEPA Media	25, 32, 33
106617	Handle Kit	39
106618	Tube Handle Assembly Complete	39
106619	Handle/Bezel Assembly	39
106709	10.75" Multi-Surface Floor Tool	18, 19, 22
106719	Waist Belt Keeper and Latch	32, 33, 34, 40
106739	Handle Bezel	39
106793	8" Sidewinder Hard Floor Tool w/ Horse Hair Brush	23
106820	Sidewinder Kit A	2, 3, 8, 9, 19
106841	Sidewinder Kit B	2, 3, 8, 9, 19
106904	Carbon Brush Set (Ametek Motor) (122157-00)	40
106960	Intercept Micro Filters, (Open Collar) fits Super HalfVac Pro	25
106961	Replacement Sleeve w/Rivets - Aluminum Wand -106293	28
106973	Intercept Micro Filters, (Closed Collar) fits Super HalfVac Pro	25
106993	Blower Tool	20, 24
106995	Intercept Micro Filters, (Closed Collar) fits SQV, QP BP, AV	25
107005	Replacement Cartridge made from HEPA Media SHV Pro, PF, ProGen	25, 37, 38
107015	Xover Performance Floor Tool	18, 22, 28
107016	Xover Floor Tool	2, 3, 4, 8, 9, 18, 20, 22, 28
107020	Replacement Hose - Sidewinder Floor Tool	28
107040	Micro Cloth Filter for Super HalfVac Pro	25
107043	Switch Box	35
107060	Foam Filter Media for Dome Filter Super HalfVac Pro	26
107076	Shoe Kit (Xover Performance Floor Tool)	28
107077	Brush Strip (Xover Productivity Floor Tool)	28
107078	Shoe Kit (Xover Productivity Floor Tool)	28
107084	Waist Belt Extension for Super HalfVac Pro	27
107093	Impact Bumper	39
107097	Xover Performance Floor Tool Kit A	18
107098	Xover Floor Tool Kit B	2, 3, 4, 5, 6, 7, 8, 9, 18
107099	Xover Performance Floor Tool Kit C	2, 3, 4, 6, 7, 8, 9, 12, 18
107100	Xover Floor Tool Kit D	2, 3, 4, 5, 6, 7, 8, 9, 18
107125	Button Lock Repair Kit Telescoping Wand -106343	28
107128	ProGuard 4 Portable w/4 Gallon Tool Kit -107184	15
107129	ProGuard 10 w/Wet/Dry Tool Kit -107187	16
107130	ProGuard 15 w/Wet/Dry Tool Kit -107187 (no squeegee)	17
107131	ProGuard 20 w/Wet/Dry Tool Kit -107187 (no squeegee)	17
107132	ProBlitz AirMover	14
107163	12" Power Nozzle Brush Roll for ProForce 1200XP	38
107166	ProForce 1200XP Vinyl Power Nozzle Bumper	38
107167	ProForce 1200XP Power Nozzle Baseplate	38
107175	Qwik Lock Fine Dust Cartridge Filter, fits ProGuard 10/15/16/20	16, 17, 26, 42, 43
107176	Qwik Lock Filter made from HEPA Media, fits ProGuard 10/15/16/20	16, 17, 26
107177	Qwik Lock™ Wet Filter, fits ProGuard 10/15/16/20	16, 17, 26, 42, 43
107178	Qwik Lock Fine Dust Cartridge Filter, fits ProGuard LI	15, 26, 41
107180	Intercept Micro Filters, One Pack of 3 fits ProGuard 15/20 (Case = 6 packs)	17, 25, 43
107181	Intercept Micro Filters, One Pack of 3 fits ProGuard 10 (Case = 6 packs)	16, 25, 42
107182	Intercept Micro Filters, One Pack of 3 fits ProGuard 4 (Case = 6 packs)	15, 25, 41
107184	ProGuard 4 Tool Kit	15, 20
107185	Front Mount Squeegee	17, 23
107186	Front Mount Squeegee Replacement Blade Set	23, 28
107187	Wet/Dry Tool Kit	16, 17, 20
107188	Ext. Handle Curved	21
107189	Master Floor Tool	20, 23
107190	Ext. Handle Straight	21
107191	Carpet Insert	20, 23
107192	Floor Brush Insert	20, 23
107193	Squeegee Insert	20, 23
107194	Crevice Tool	20, 24
107195	Dust Brush	20, 24
107196	Claw Nozzle	20, 24
107198	Hose Assembly	42, 43
107199	Squeegee Tool	20, 23, 28
107203	Cord Retention Clip	39
107251	ProForce 1200XP	11
107252	ProForce 1500XP	11
107255	Bulkhead	38
107256	Carry Handle with Tool Caddy	39
107257	Motor Housing	38
107258	Filter Cartridge Cover	38
107260	1500XP Bag Housing Assembly	39
107282	1500XP Power Nozzle Cover w/Detent Springs & Decal	38
107283	1200XP Power Nozzle Cover w/Detent Springs & Decal	38
107285	1200XP Bag Housing Assembly	39
107290	1 1/4" Kit B	19
107291	Xover Performance Floor Tool w/ 1½" Connection	19
107294	Thermal Protector	32, 33, 34, 40
107300	Carpet Clamp Kit	14
107303	Super Coach Pro 10 w/Xover Floor Tool Kit D -107100	8
107304	Super Coach Pro 10 w/Xover Floor Tool Kit B -107098	8
107305	Super Coach Pro 10 w/Xover Performance Floor Tool Kit C -107099	8
107306	Super Coach Pro 10 w/Hard Surface Flooring Kit A -101829	8
107307	Super Coach Pro 6 w/Xover Performance Floor Tool Kit C -107099	9
107308	Super Coach Pro 6 w/Xover Floor Tool Kit B -107098	9

INDEX

Part No.	Product Name	Page No(s).
107309	Super Coach Pro 6 w/Hard Surface Floor Kit A -101829	9
107310	Super Coach Pro 6 w/Xover Floor Tool Kit D -107100	9
107313	Intercept Micro Filters, fits Super Coach Pro 10, GoFit 10	2, 8, 25, 29, 31
107314	Intercept Micro Filters, fits SCP6, GFFP, PV GoFit 6	3, 6, 7, 9, 12, 13, 25, 29, 30, 31, 35
107315	Exhaust Filter made from HEPA Media SCP, GFFP, PV FS 6 (2 pack)	25, 31, 35
107329	ProGen 12	10
107330	ProGen 15	10
107336	Hard Surface Flooring Kit B	8, 18
107337	Blower Kit C	20
107338	Super Coach Pro 10 w/Hard Surface Flooring Kit B -107336	8
107339	Super Coach Pro 10 w/Hard Surface Flooring Kit C -105889	8
107340	Super Coach Pro 10 w/Sidewinder Kit A -106820	8
107341	Super Coach Pro 10 w/Sidewinder Kit B -106841	8
107342	Super Coach Pro 10 w/Hard Surface Flooring Kit D -105891	8
107343	Super Coach Pro 6 w/Sidewinder Kit A -106820	9
107344	Super Coach Pro 6 w/Sidewinder Kit B -106841	9
107359	ProGuard 15 w/107187 Kit & Front Mount Squeegee	17
107360	ProGuard 20 w/107187 Kit & Front Mount Squeegee	17
107363	ProVac FS 6 w/Restaurant Kit -100727	13, 19
107371	Super Coach Pro 6 w/Pest Control Kit -103439	9, 18
107374	Intercept Micro Filters, fits SCP 6, GFFP, PV, GF 6 (Closed Collar)	3, 6, 7, 9, 12, 13, 25, 35
107377	Intercept Micro Filters, fits ProGen (Case = 15 packs)	10, 25, 37
107386	ProGuard 16 MD w/Wet/Dry Tool Kit -107187	16
107463	Sidewinder Kit C	2, 3, 8, 9, 19
107464	Super Coach Pro 6 w/Sidewinder Kit C -107463	9
107465	Super Coach Pro 10 w/Sidewinder Kit C -107463	8
107466	Remediation Kit	2, 3, 8, 9, 12, 18
107467	Super Coach Pro 6 w/Remediation Kit -107466	9
107468	Super Coach Pro 10 w/Remediation Kit -107466	8
107497	Super Coach Pro 6 w/Xover Kit (107100), 20" Tool & Vac Station	9
107502	Intercept Micro Filters, fits FreeFlex	25
107516	Battery Charger and Charger Cord	7, 26, 35
107527	ProBlade Carpet Floor Tool	19, 22
107528	ProBlade Hard Surface Floor Tool	19, 20, 23
107529	Telescoping Straight Wand	19, 21, 22, 23, 28
107530	ProBlade Carpet Floor Tool Kit	2, 3, 4, 8, 9, 19
107531	ProBlade Hard Surface Floor Tool Kit	8, 9, 19
107532	ProBlade Carpet & Hard Surface Floor Tool Kit	2, 3, 4, 5, 6, 7, 8, 9, 13, 19
107533	Super Coach Pro 6 w/ProBlade Carpet Floor Tool Kit -107530	9
107534	Super Coach Pro 6 w/ProBlade Hard Surface Floor Tool Kit -107531	9
107535	Super Coach Pro 6 w/ProBlade Carpet & Hard Surface Floor Tool Kit -107532	9
107536	Super Coach Pro 10 w/ProBlade Carpet Floor Tool Kit -107530	8
107537	Super Coach Pro 10 w/ProBlade Hard Surface Floor Tool Kit -107531	8
107538	Super Coach Pro 10 w/ProBlade Carpet & Hard Surface Floor Tool Kit -107532	8
107595	Demo Duffel Bag w/ Wheels	27
107596	ProBlitz XP AirMover	14
107598	Straight Wand High Dusting Kit	20
107599	High Dusting Kit w/ ProBlade Tool	20
107600	High Dusting Curved Wand Kit	20
107601	Deluxe Straight and Curved Wand High Dusting Kit	20
107613	ProVac FS 6 w/ProBlade Carpet & Hard Surface Floor Tool Kit -107532	13
107628	Two-Piece, Two Bend, Telescoping Wand (Flip Lock)	2, 3, 4, 8, 9, 18, 21, 28
107632	Pedestal	27
107638	Exhaust Filter made from HEPA Media SCP, GFFP, PV FS 6 (90x2 pk)	25
107639	Micro Cloth Filter for SCP 6, GFFP, PV FS 6 (Master Pack) (qty 25)	25
107644	GoFree Flex Pro II 12Ah w/Xover Floor Tool Kit D -107100	7
107645	GoFree Flex Pro II 12Ah w/ProBlade Carpet & Hard Surface Floor Tool Kit -107532	7
107648	Static-Dissipating Hose (Black) w/Cuffs 1½"	29, 30, 31, 32, 33, 34, 35, 40
107650	GoFree Flex Pro II 12Ah w/Xover Floor Tool Kit B -107098	7
107656	ProGuard 3 Charger	26
107666	Intercept Micro Filters, GoFit 3 10/pk (open collar)	4, 5, 25, 29, 30
107667	Intercept Micro Filters, GoFit 3 10/pk (closed collar)	4, 5, 25
107676	Blower Door Accessory (New)	27
107680	Intercept Micro Filters, SCP 10, GoFit 10 10/pk (closed collar)	2, 8, 25
107681	GoFree Flex Pro II 12Ah w/Xover Telescoping Wand Kit and 101613 Tool (107100)	7
107683	GoFit 4Ah Battery	5, 6, 26, 30
107684	GoFit 8Ah Battery	5, 6, 26, 30
107685	GoFit Battery Charger and Cord	5, 6, 26, 30
107688	GoFit 10 w/Xover Telescoping Wand Kit D (107100)	2
107689	GoFit 10 w/Xover Two-Piece Wand Tool Kit B (107098)	2
107690	GoFit 10 w/ProBlade Carpet Floor Tool Kit (107530)	2
107691	GoFit 10 w/ProBlade Carpet and Hard Surface Floor Tool Kit (107532)	2
107692	GoFit 10 w/15" Carpet Sidewinder Kit A (106820)	2
107693	GoFit 10 w/18" Carpet Sidewinder Kit B (106841)	2
107694	GoFit 10 w/15" Carpet and Hard Surface Sidewinder Kit C (107463)	2
107695	GoFit 10 w/Remediation Kit (107466)	2
107696	GoFit 6 w/Xover Telescoping Wand Kit D (107100)	3
107697	GoFit 6 w/Xover Two-Piece Wand Tool Kit B (107098)	3
107698	GoFit 6 w/ProBlade Carpet Floor Tool Kit (107530)	3
107699	GoFit 6 w/ProBlade Carpet and Hard Surface Floor Tool Kit (107532)	3
107700	GoFit 6 w/15" Carpet Sidewinder Kit A (106820)	3
107701	GoFit 6 w/18" Carpet Sidewinder Kit B (106841)	3
107702	GoFit 6 w/15" Carpet and Hard Surface Sidewinder Kit C (107463)	3
107703	GoFit 6 w/Remediation Kit (107466)	3
107704	GoFit 6 w/Pest Management Tool Kit (103439)	3
107705	GoFit 6 Plus w/Xover Telescoping Wand Kit D (107100)	3
107706	GoFit 6 Plus w/Xover Two-Piece Wand Tool Kit B (107098)	3
107707	GoFit 6 Plus w/ProBlade Carpet Floor Tool Kit (107530)	3
107708	GoFit 6 Plus w/ProBlade Carpet and Hard Surface Floor Tool Kit (107532)	3
107709	GoFit 6 Plus w/15" Carpet Sidewinder Kit A (106820)	3
107710	GoFit 6 Plus w/18" Carpet Sidewinder Kit B (106841)	3
107711	GoFit 6 Plus w/15" Carpet and Hard Surface Sidewinder Kit C (107463)	3
107712	GoFit 6 Plus w/Remediation Kit (107466)	3
107713	GoFit 3 w/Xover Telescoping Wand Kit D (107100)	4
107714	GoFit 3 w/107098 Xover 2-pce wand	4
107715	GoFit 3 w/107530 ProBlade carpet	4
107716	GoFit 3 w/107532 ProBlade combo	4
107724	12 Ah Replacement Battery	7, 26, 35
107726	GoFit 3 w/straight cuff hose & 100727 Restaurant kit	4
107735	GoFit 10 w/Xover Performance Telescoping Wand Took Kit C (107099)	2
107736	GoFit 6 w/Xover Performance Telescoping Wand Took Kit C (107099)	3
107737	GoFit 6 Plus w/Xover Performance Telescoping Wand Took Kit C (107099)	3
107738	GoFit 3 w/107099 Xover Perf tele wand	4
107742	Super Coach Pro 6 w/Two Piece Wand -101338 and Xover Tool -107016	9
107743	Super Coach Pro 6 w/Telescoping Wand -107628 and Xover Tool -107016	9
107744	Super Coach Pro 10 w/Two Piece Wand -101338 and Xover Tool -107016	8
107745	Super Coach Pro 10 w/Telescoping Wand -107628 and Xover Tool -107016	8
107747	GoFit 3 w/Two-Piece Wand (101338) and Xover Tool (107016)	4
107748	GoFit 3 w/Telescoping Wand (107628) and Xover Tool (107016)	4
107749	GoFit 6 w/Two-Piece Wand (101338) and Xover Tool (107016)	3
107750	GoFit 6 w/Telescoping Wand (107628) and Xover Tool (107016)	3
107751	GoFit 10 w/Two-Piece Wand (101338) and Xover Tool (107016)	2
107752	GoFit 10 w/Telescoping Wand (107628) and Xover Tool (107016)	2
107753	Telescoping Wand (107628) & Xover Floor Tool (107016)	18
107754	Two-Piece Wand (101338) and Xover Floor Tool Kit (107016)	18
107766	GoFit 6 HEPA w/ Remediation Tool Kit (107466)	12
107767	HEPA w/Xover® Performance Telescoping Wand Tool Kit C (107099)	12
107774	GoFit 3 Cordless 4Ah w/Xover Telescoping Wand Kit D (107100)	5
107775	GoFit 3 Cordless 4Ah w/Xover Two-Piece Wand Kit (107098)	5
107776	GoFit 3 Cordless 4Ah w/ProBlade Carpet and Hard Surface Floor Tool Kit (107532)	5
107777	GoFit 3 Cordless 8Ah w/Aviation 1.5" Tool Kit (106502)	5
107778	GoFit 3 Cordless 8Ah w/Xover Telescoping Wand Kit (107100)	5
107779	GoFit 3 Cordless 8Ah w/Xover Two-Piece Wand Kit (107098)	5
107780	GoFit 3 Cordless 8Ah w/ProBlade Carpet and Hard Surface Floor Tool Kit (107532)	5
107782	GoFit 6 Cordless 4Ah w/Xover Telescoping Wand Kit D (107100)	6
107783	GoFit 6 Cordless 4Ah w/Xover Two-Piece Wand Kit (107098)	6
107784	GoFit 6 Cordless 4Ah w/ProBlade Carpet and Hard Surface Floor Tool Kit (107532)	6
107786	GoFit 6 Cordless 4Ah w/ProBlade Carpet and Hard Surface Floor Tool Kit (107532)	6
107787	GoFit 6 Cordless 8Ah w/Xover Two-Piece Wand Kit (107098)	6
107788	GoFit 6 Cordless 8Ah w/ProBlade Carpet and Hard Surface Floor Tool Kit (107532)	6
107793	Vac Station w/ One Shelf	27
107794	Vac Station w/ Two Shelves	27
107795	GoFit 6 Cordless 8Ah w/Xover Performance Telescoping Wand Tool Kit C (107099)	6
107796	GoFree Flex Pro II 12Ah w/Xover Performance Telescoping Wand Kit (107099)	7
107800	GoFit 10 w/ Hard Surface Tool w/ Nylon and Horse Hair Blend Brush & Blower Tool Kit	2
450017	Adjusting Nut for Telescoping Wand -106290	28
509944	Bag of Loose Parts	42
510094	Motor Cover Assembly	42
510097	Motor Cover Assembly (ProGuard 15 only)	43
510104	Motor Cover Assembly (ProGuard 20 only)	43
510106	Tank (with Inlet)	41
510108	Filter Cage and Float Assembly	41
510109	Casters	41
510124	Blower Wheel, Washer, Spacer, Nut	41
510127	Switch Assembly	42, 43
510140	Wheel Assembly (ProBlitz XP only)	41
510141	Switch & Knob Assembly	41
510142	Bag of Loose Parts	43
510179	Latch and Retainer w/Lock Nut & Screw	31, 35
510180	Gasket for Tank	31
510181	Gasket for Tank	31, 35
510183	Dome Filter for SCP 10, SCP 6, GFFP, PV FS 6, GoFit	26, 29, 31, 35
510184	Foam Filter Media for Dome Filter SCP 10, SCP 6, GFFP, PV, GoFit 6	26, 29, 31, 35
510185	Cover Wire w/2 screws	31, 35
510186	Harness Spacers	31, 35
510188	Housing Assembly Lower w/Screws	31
510192	Tensioning Straps	31, 35
510193	Upper Motor Support w/Gasket	31, 35

INDEX

Part No.	Product Name	Page No(s).
510194	Lower Motor Support (5 screws)	31, 35
510216	Housing Assembly Lower w/Screws	35
510217	Lower Battery Housing	35
510218	Upper Battery Housing	35
510219	Battery Support	35
510220	Lead Assembly w/Screw	35
510221	Actuator w/Washer, Screw, Springs	35
510224	Switch and Switch Cover	41
510225	Motor Cover and Top Handle	41
510252	Hose Power Head Assembly	36
510258	Extension Tube Assembly	37
510259	Hose Assembly	37
510286	Motor Cover Assembly	42
510301	Waist Belt Buckles and Straps Set	31, 35
510413	Straight Telescoping Wand Replacement Latch	28
510551	Inlet Grill with Outlets	41
510738	Cord Holder	27, 31, 32, 33, 34, 40
510740	Motor/Fan for GFFP II (36VDC)	35
510741	Motor Gasket fo GFFP II	35
510742	Left/Right Baffles	35
510771	Upper Harness Plate w/ Screw	29, 30
510772	Lower Harness Plate w/ Screw	29, 30
510773	Harness Quick Adjust Holder w/ Screw (GoFit 10)	29
510774	Harness Quick Adjust Holder w/ Screw (GoFit 6)	29, 30
510775	Harness Quick Adjust Holder w/ Screw (GoFit 3)	29, 30
510776	Cover Wire w/ Screws	29
510777	Upper Motor Support w/ Gasket	29
510778	Lower Housing Assembly w/ Screws	29
510779	Latch Assembly Complete w/ Retainer and Screw	29, 30
510780	Motor Gaskets Upper and Lower	29
510781	Lower Motor Support w/ Screws	29
510782	Yellow Cord Guide w/ Screws	29
510783	Fastener Package	29, 30
510802	Upper Motor Support w/ Gasket	30
510803	Motor Gaskets Upper and Lower	30
510804	Motor Assembly 60V	30
510805	Lower Motor Support w/ Screws	30
510806	Front Housing Assembly w/ Screws	30
510807	Rear Housing Assembly w/ Screws	30
510808	Battery Housing Assembly w/ Screws	30
510811	Vac Station Wand Clip & Cord Hook	27
510812	Upper & Lower Motor Gaskets (GoFit 6 HEPA)	29
826387	Tank Latch	41, 42
826881	Hose Clip	43
827415	Gasket Motor	42, 43
829900	Locking Ring Cuff	42
830098	ProGuard 4 Diffuser	41
830519	Exhaust Duct	41
830576	Caddy, Right	42
830577	Caddy, Left	42
830609	Exhaust Foam Pad	42, 43
830611	Wheel Cap	42
830686	Handle	42
831024	Shaft	42, 43
831567	Motor Assembly Complete	42, 43
831577	Swivel Hose Cuff 1½"	42, 43
831651	Duct Motor Exhaust/Cooling Fan	42, 43
831659	Collector Assembly with Foam	42, 43
832123	Caster	42
832190	8" Wheel Assembly	42
833417	Power Cord Assembly	42, 43
833425	Tank Inlet Adapter	42, 43
833426	Gasket Inlet Adapter	42, 43
833429	Drain Adapter with Gasket	42
833431	Caster 3"	42
833432	50' 14-Gauge Extension Cord w/Twist Lock Plug (Yellow)	27, 42, 43
833449	Cap Rubber Drum Pour Spout	43
833450	Pour Spout Cable Lanyard	43
833451	Hose Drain Assembly 30"	43
833452	Hose Clamp	43
833454	Bushing, Drum Hinge	43
833456	Base, Cart	43
833459	Wheel 10"	43
833460	Wheel Spacer	43
833461	Axle Bracket	43
833462	Caster 4" w/Bearings	43
833463	Plate Pedal Lock	43
833465	Handle, Cart Base	43
833492	Screw 11689 x 1 ¼"	42, 43

Part No.	Product Name	Page No(s).
833493	Washer (13/64 ID) #10	42, 43
833518	Gasket Lid	42, 43
833523	Squeegee Pivot Plate Assembly	28
833528	Squeegee Mounting Bracket	28
833529	Spring	28
833530	Rod	28
833532	Squeegee Assembly	28
833542	Oval Hand Knob	28
833587	Locking Ring Cuff	42, 43
833600	Diffuser Assembly	42, 43
833601	Tank, 10 Gallon	42
833602	Tank, 15 Gallon (ProGuard 15 only)	43
833603	Tank, 20 Gallon (ProGuard 20 only)	43
833658	Inlet Grill	41
833659	Exhaust Grill	41
833660	Blower Wheel	41
833662	Thumb Screw	43
833673	Threaded Inserts - Housing	41
833674	Motor	41
833675	30' Cord w/Plug	41
833690	Foot Bumper	41
833691	Retractable Handle (ProBlitz XP only)	41
833778	Ball Float	42, 43
833779	Cap Retainer	43
833948	Purple Cap	31, 35
833951	Upper Motor Gasket	31
833952	Lower Motor Gasket	31
834000	Micro Cloth Filter for Super Coach Pro 10, GoFit 10	25, 29, 31
834042	Triangular Lower Foam Pad	31, 35
834043	Rectangular Upper Foam Pad	31, 35
834051	5⁄16" - 18 x1 3⁄8" Lock Screw (2 screws)	31, 35
834072	Micro Cloth Filter for SCP 6, GFFP, PV, GoFit 6	25, 29, 30, 31, 35
834249	Switch Cord and Power Cord Assembly (old)	35
834363	Wheel/Axle Replacement Kit	38
834678	Charger Cord	35
834687	Bag Cover Housing Plate	37
834688	Transition Duct Assembly Upright	37
834690	Bag Cover Gasket Plate	37
834691	Transition Duct Gasket	37
834694	Crevice Tool	24
834695	Upholstery Tool	24
834696	Blower Gasket Housing	37
834697	Inlet Motor Gasket	37
834701	Motor Mount Gasket	37
834704	Foam Motor Housing	37
834705	Motor Assembly	37
834717	Exhaust Filter Cover	37
834718	Filter Housing Separator	37
834721	Motor Intake Filter	26, 37
834722	Foam Filter Housing	37
834723	Bag Full Indicator Sensor	37
834724	Extension Handle Clip	37
834730	Bag Housing Tree Gasket	37
834740	Power Cord w/Strain Relief 40' 12"	36
834753	Filter Housing Spring Hose	37
834787	Rear Wheel 15"	36
834788	Cap Button	36
834789	Rear Wheel Shaft 15"	36
834790	Retaining Ring	36
834791	Center Wheel	36
834797	Main Control Board	36
834804	Power Nozzle Base 15"	36
834809	Front Base Bumper 15"	36
834810	Side Base Bumper 15"	36
834816	LED Strip Light Lens	36
834823	Bag Housing Rim	37
835035	Front Base Bumper 12"	36
835036	Side Base Bumper 12"	36
835150	Filter Housing Gasket Separator	37
835344	Motor Harness	37
835345	Washer Pan Screw M4	36, 37
835349	LED Strip Light Harness Assembly	36
835350	Brush Removal Cover 15" Assembly	36
835351	Power Nozzle Adaptor Hose	37
835352	Brush Removal Cover 12" Assembly	36
835354	Filter Cover Assembly	37
835358	Pan Screw M4 20mm	37
835675	Center Wheel Pivot Rod Assembly	36
835676	Foot Pedal 15" Assembly	36

INDEX

Part No.	Product Name	Page No(s).
835677	Brush Roller Clutch Assembly	36
835678	Timing Belt Assembly	36
835679	Base Wire Brace	36
835680	Front Base Plate 15" Assembly	36
835681	Rear Base Plate 15" Assembly	36
835682	Brush Release Button 15" Assembly	36
835683	Control Board Hall Effect Assembly	36
835684	Filter Housing Clamp Assembly	36
835685	15" Pulley Assembly	36
835686	Base Cover 15" Assembly	36
835687	Front Bag Housing 15"	37
835688	Lower Cord Wrap Bracket Assembly	37
835689	Filter Housing Harness Assembly	37
835690	Filter Housing Harness Enclosure Assembly	37
835691	Motor Housing Assembly	37
835692	Motor Pulley Assembly	37
835693	Rear Bag Housing Assembly	37
835694	Carry Handle w/Tool Caddy Assembly	37
835695	Bag Housing Pivot Sleeve Assembly	37
835696	Filter Lid Cam Lock Assembly	37
835697	Bag Cover Housing Interlock Assembly	37
835698	Hinge with Rivet Assembly	37
835701	Handle Screw Nut Assembly	36
835702	Foot Pedal 12" Assembly	36
835703	Front Base Plate 12" Assembly	36
835704	Rear Base Plate 12" Assembly	36
835705	Brush Release Button 12" Assembly	36
835706	12" Pulley Assembly	36
835707	Base Cover 12" Assembly	36
835708	Front Bag Housing 12"	37
835714	Motor Brush	37
836099	Motor/Fan (120V) (Wolong)	31
836225	Switch Box, Full Assembly	31
836357	Turbo Brush	22
836478	Electrified Hose Receptacle (PV FS)	31
836480	Power Cord Assembly	31
836554	Switch Box	31
836627	ProGen 12 Service Base Assembly	36
836630	Wheel 12"	36
840011	Harness Assembly Complete	31, 35
840042	Motor Support Gasket	37
840112	Upper Harness Assembly	31, 35
840114	Lower Harness Assembly	31, 35
840899	Motor Gasket (old)	35
841368	25' Cord w/Plug	41
841708	Exhaust Filter Door w/Latch	31, 35
841724	Power Plug Assembly	31
841726	Battery Cord Assembly	35
841817	Brush Roller 12"	36
841818	Brush Roller 15"	36
841933	Carbon Brush Set (Wolong)	29, 31
842193	Cord Lock for ProVac CN, RunningVac, QuietPro CN	27
842300	Wand Adapter	20, 28
842344	Handle Assembly	36
842345	Handle Tube Assembly	36
843473	Switch Cord and Power Cord Assembly (GFFP II)	35
843475	Switch Cord Assembly (GFFP II)	35
843694	Purple Cap	29, 30
843842	Lower Harness Articulating Arm	29, 30
843848	Exhaust Filter Door	29
843939	Lower Harness Assembly	29, 30
843947	Harness Quick Adjuster Assembly	29, 30
843963	Upper Foam Pad	29
843964	Lower Foam Pad	29
843966	Micro Cloth Filter for GoFit 3	25, 29, 30
844073	Harness Complete Assembly	29, 30
844156	Switch Box Assembly	29
844193	Motor Assembly 1300W	29
844488	Exhaust Filter made from HEPA Media (GoFit)	25, 29
844545	Motor Assembly with Lead (GoFit 6 PLUS)	29
844665	Upper Harness Assembly	29, 30
844754	Battery Button Latch	30
847650	Twist-on Dome Filter w/ HEPA Media for GoFit Cordless	25, 30
847718	GoFit Charger Cord	30
847761	HEPA Filter (GoFit 6 HEPA)	24, 29
847768	Upper Motor Support (GoFit 6 HEPA)	29
847770	Motor Assembly (GoFit 6 HEPA)	29
847834	Filter Knob (GoFit 6 HEPA)	29
100092PT	Floor Tool w/Adjustable Nylon Brush	22, 28
100107PT	11" Crevice Tool	19, 20, 24
100109PT	28" Crevice Tool	18, 24
104274PT	HEPA Filter Assembly Complete w/Bottom Cap for LineVacer (Black)	25, 40
140755-12	Lock Washer Ext 5/16"	43
161255-2	Nut Lock 3/8-16 29,	28, 43
161255-8	Nut Lock #10 45,	42, 43
509776-19	Motor Assembly	41
805466-3	Screw Hex HD 43236 X 5/8"	43
805557-1	Washer 13/32 ID	43
808380-0	Screw Pan CR #8 x ½"	31, 35
808380-22	Screw Pan CR #8 x ¾"	31, 35
808872-2	Screw 11963 X 1 ¼"	43
813836-1	Nut Washer Cap	43, 42
820563-13	Screw, Type AB #10 x 1"	41
820563-4	Screw, Type AB #10 x ¾"	41, 42, 43
820563-5	Screw Type "AB" #10 x 1-3/4"	42
820563-7	Screw, Type AB #10 x ¾"	41
822374-8	Carbon Brush Set	42, 43
826453-2	Screw 11963 x ¾"	42, 43
829719-4	Cord Assembly	41
830101-1	Filter Cage	42, 43
830536-1	Wire Tie	28
830565-2	Handle Motor Cover	42, 43
831024-3	Axle	43
831337-6	Premium Hose Assembly	41, 42
831653-1	Lid	42
831653-3	Lid with Foam	42, 43
831657-1	Power Cord Assembly	42
831660-2	Dust Drum Assembly	42
831668-1	Tote	42
832397-1	Screw Hex 42437 X 3¾"	43
832397-2	3/8" Bolt	28
832656-1	Plate Collector	41
833424-1	Drum Latch	42, 43
833442-1	Hose Assembly	28
833492-1	Screw 11963 X ¾"	42, 43
833492-2	Screw 11689 x 13/8"	42
833656-1	ProBlitz Housing (right side)	41
833657-1	ProBlitz Housing (left side)	41
833948-1	Black Cap	31
834035-3	Gasket Tank GoFit 6 QT	29, 30
834035-4	Gasket Tank GoFit 3 QT	29, 30
834035-5	Gasket Tank GoFit 10 QT	29
834730-1	Filter Housing Tree Gasket	37
834730-2	Motor Housing Tree Gasket	37
834730-3	Lid Rear Tree Gasket	37
834740-1	Power Cord w/Strain Relief 50' 15"	36
836225-1	Switch Cord and Power Cord Assembly	31
836554-1	Switch Box	31
842668-2	ProGuard Lid	41
844156-1	Switch Box Assembly for GoFit PH Service (GoFit PH)	29
844156-2	Switch Box Assembly w/ Internal Electronics (GoFit 6 PLUS	29

LIMITED WARRANTY

This limited warranty applies to all ProTeam®, Inc. products, including, without limitation, Backpacks, Uprights, Air Movers, and Wet/Dry product lines, and certain battery packs and chargers (collectively, the "products"). Specific warranty terms for certain product parts, motors, battery packs and accessories are stated below.

If you have any questions or need assistance regarding the warranty of your product, please call ProTeam Customer Service department at (866) 888-2168, via email or fax. Customer service hours may vary and will be updated on the ProTeam website at proteam.emerson.com.

Limited Warranty

ProTeam, Inc., located at 12969 Manchester Road, St. Louis, MO 63131 ("ProTeam" or "we") warrants to the original purchaser only ("you" or "your"), subject to "Warranty Exclusions" (as applicable), that the product parts, motor, battery packs and/or charger identified below will be free from defects in materials and workmanship, including labor costs in connection therewith, when under normal use and service beginning on the original date of purchase and continuing for the corresponding period (each a "Warranty Period"). This limited warranty terminates if you transfer the product to any other person or entity.

Molded Body Parts

- All molded body parts, except as indicated below – expected lifetime of the product
  - – All Uprights – 3 years

Motors

- Backpack (other than specified below), Upright products – 3 years or 1600 hours, whichever comes first, subject to your compliance with the following carbon brush replacement and maintenance schedule. Proof of such compliance may be required:
  - – 1st change – after the first 800 hours of operation
  - – 2nd change – after the next 400 hours of operation
  - – 3rd change – after the next 200 hours of operation
- GoFit® 3, GoFit 6, GoFit 6 PLUS, GoFit 10, GoFit HEPA, Super Coach Pro® 6, Super Coach Pro 10 and ProVac® FS 6 - 3 years or 1900 hours, whichever comes first, subject to your compliance with the following carbon brush replacement and maintenance schedule. Proof of such compliance may be required:
  - – 1st change – after the first 1000 hours of operation
  - – 2nd change – after the next 500 hours of operation
  - – 3rd change – after the next 200 hours of operation
- GoFit Cordless – 2 years
- GoFree® Flex Pro II – 2 years
- ProBlitz® AirMovers – 3 years
- ProForce® Brushroll Motor – 2 years
- ProGuard® Wet/Dry 10, 15, 16 MD, 20 – 3 years or 1400 hours, whichever comes first, subject to your compliance with the following carbon brush replacement and maintenance schedule. Proof of such compliance may be required:
  - – 1st change – after the first 400 hours of operation
  - – 2nd change – after the next 400 hours of operation
  - – 3rd change – after the next 300 hours of operation
- ProGuard 4 Portable Wet/Dry – 1 year
- ProGuard LI 3 Cordless – 1 year

Chargers and Battery Packs

- GoFit Cordless battery packs & charger – 2 years
- GoFree Flex Pro II charger – 2 years
- GoFree Flex Pro II battery pack – 2 years
- ProGuard LI 3 battery pack and charger – 1 Year

Component Parts

- All component parts not otherwise listed above or excluded from the below "What is Not Covered Section

What is Not Covered - Warranty Exclusions

This limited warranty does not extend to and expressly excludes:

- Normal wear and tear on the product and/or attachments and accessories including, without limitation, extension cords and cord holders; hoses; filters; switches; motor carbon brushes; wands and floor tools; detachable accessories; wheels; brush rollers and belts; bumpers/plates; straps and buckles; latches.
- Damage or burnout of the product motor resulting from failure to clear a blockage occurring during the normal course of use.
- Loss or damage to the product resulting from conditions beyond ProTeam's control including without limitation, misuse, accident, abuse, neglect, negligence (other than ProTeam's), use beyond listed capacity, or improper installation, maintenance or application.
- Improper modification or alteration may nullify this limited warranty.
- Loss or damage to the product resulting from failure to follow the required maintenance schedule, or failure to use the product in accordance with ProTeam's written instructions, guidelines or the terms of its Owner's Manual.
- Lithium Ion Battery Charger limited warranty applies only to defects arising under normal usage. All other damages are expressly excluded.

How to Notify ProTeam

If you discover that your product has a defect that you believe is covered by this limited warranty, you must notify ProTeam or the ProTeam authorized dealer who sold you the product within the applicable Warranty Period. You may contact ProTeam Customer Service department at (866) 888-2168 via the fax number or the email address listed in your Owner's Manual or at proteam.emerson.com. Customer service hours may vary and will be updated on the ProTeam website. In order for a warranty claim to be processed as quickly as possible, we suggest that you complete the registration card made available to you on the ProTeam website at proteam.emerson.com. If you do not complete a registration card, you will be required to present a dated sales receipt in order to receive warranty service. Warranty coverage for all products is subject to your compliance with the listed notification and repair procedures. Notification procedures for the GoFree Flex Pro II and GoFit battery packs are set forth below.

What We Will Do to Correct Problems

ProTeam or your local ProTeam authorized dealer will determine whether your claim is covered by this limited warranty, subject to the limitations or exclusions described above, and whether the claim is within the applicable Warranty Period. For all warranty claims other than for the GoFree Flex Pro II and GoFit battery packs, provided your claim is covered under this limited warranty, ProTeam or its authorized dealer will, at ProTeam's sole option and discretion, (a) repair or replace the defective portion of your product or (b) replace your entire product. GoFree Flex Pro II and GoFit battery packs are not field serviceable. If ProTeam is unable to repair your product or provide you with a suitable replacement, you will receive a refund of your purchase price or a credit to be used toward the purchase of a new product or GoFree Flex Pro II and GoFit battery packs. Products repaired or replaced during the Warranty Period shall be covered for the remainder of the original Warranty Period. Unauthorized repairs or modifications, or use of any parts other than genuine ProTeam parts, will nullify this limited warranty.

GoFree Flex Pro II and GoFit Battery Packs Notification Procedures

The GoFree Flex Pro II and GoFit battery packs are not field serviceable. Contact ProTeam Customer Service at 866.888.2168 for service options. Please call the Customer Service department number above or visit the ProTeam website to request a RAN. If you have not submitted a completed registration card, you must include a dated, written proof-of-purchase and a statement explaining the nature of the malfunction with the RAN. If there is no local ProTeam authorized dealer, ProTeam's Customer Service will give you the name and address of the nearest field service representative.

No Other Express Warranty Applies

THE LIMITED WARRANTIES PROVIDED ABOVE ARE THE SOLE AND EXCLUSIVE WARRANTIES PROVIDED BY PROTEAM TO YOU, AND ARE IN LIEU OF ALL OTHER WARRANTIES, WRITTEN OR ORAL, EXPRESS OR IMPLIED, WHETHER ARISING BY OPERATION OF LAW OR OTHERWISE, INCLUDING, WITHOUT LIMITATION, WARRANTIES OF MERCHANTABILITY OR FITNESS FOR A PARTICULAR PURPOSE, WHETHER OR NOT THE PURPOSE HAS BEEN DISCLOSED AND WHETHER OR NOT THE PRODUCT HAS BEEN SPECIFICALLY DESIGNED OR MANUFACTURED FOR YOUR USE OR PURPOSE. THE FOLLOWING SENTENCE APPLIES ONLY TO CONSUMER PURCHASERS: DISCLAIMERS OF IMPLIED WARRANTIES, INCLUDING WITHOUT LIMITATION, IMPLIED WARRANTIES OF MERCHANTABILITY AND FITNESS FOR A PARTICULAR PURPOSE, SHALL NOT TAKE EFFECT UNTIL THE END OF THE WARRANTY PERIOD. No employee, agent, dealer, or other person is authorized to alter this limited warranty or make any other warranty on behalf of ProTeam. The terms of this limited warranty shall not be modified by ProTeam, the original owner, or their respective successors or assigns.

Limitation of Liability

TO THE EXTENT PERMITTED BY LAW, IN NO EVENT SHALL PROTEAM BE LIABLE FOR ANY INCIDENTAL, SPECIAL, INDIRECT, OR CONSEQUENTIAL DAMAGES, INCLUDING ANY ECONOMIC LOSS, WHETHER RESULTING FROM NONPERFORMANCE, USE, MISUSE OR INABILITY TO USE THE PRODUCT OR PROTEAM'S NEGLIGENCE. SELLER SHALL NOT BE LIABLE FOR DAMAGES CAUSED BY DELAY IN PERFORMANCE AND IN NO EVENT, REGARDLESS OF THE FORM OF THE CLAIM OR CAUSE OF ACTION (WHETHER BASED IN CONTRACT, INFRINGEMENT, NEGLIGENCE, STRICT LIABILITY, OTHER TORT OR OTHERWISE), SHALL PROTEAM'S LIABILITY TO YOU AND/OR YOUR CUSTOMERS EXCEED THE PURCHASE PRICE PAID BY YOU FOR THE PRODUCT. The term "consequential damages" shall include, but not be limited to, loss of anticipated profits, business interruption, loss of use or revenue, cost of capital or loss or damage to property or equipment.

Some states do not allow the exclusion or limitation of incidental or consequential damages, so the above limitation may not apply to you.

This limited warranty gives you specific legal rights, and you may also have other rights which vary from State to State.

This limited warranty is governed by the laws of the State of Missouri, U.S.A., without regard to conflicts of law provisions.

Dispute Resolution

In the event of any dispute INCLUDING, BUT NOT LIMITED TO, BREACH OF CONTRACT, BREACH OF WARRANTY, CLAIMS BASED IN TORT, NEGLIGENCE, PRODUCT LIABILITY, FRAUD, MARKETING, STATE OR FEDERAL REGULATIONS, ANY CLAIMS REGARDING THE ENFORCEABILITY OF THIS LIMITED WARRANTY, AND THE WAIVER OF CLASS ACTION TRIALS between PROTEAM AND YOU, either party may choose to resolve the dispute by binding arbitration, as described below, instead of in court. THIS MEANS IF EITHER PROTEAM OR YOU CHOOSE BINDING ARBITRATION, NEITHER PARTY SHALL HAVE THE RIGHT TO LITIGATE SUCH CLAIM IN COURT OR HAVE A JURY TRIAL. DISCOVERY AND APPEAL RIGHTS ARE LIMITED IN BINDING ARBITRATION. ProTeam and You agree that the proper venue if Arbitration is not so chosen by ProTeam OR You of all actions arising in connection herewith shall be only in the state of Missouri and the parties agree to such jurisdiction. No action, regardless of form, arising out of transactions relating to the agreement, may be brought by either party more than two (2) years after the cause of action has accrued. The U.N. Convention on Contracts for the International Sales of Goods shall not apply to this agreement.

Class Action Waiver

BINDING ARBITRATION MUST BE ON AN INDIVIDUAL BASIS. THIS MEANS NEITHER PROTEAM OR YOU MAY JOIN OR CONSOLIDATE CLAIMS IN ARBITRATION BY OR AGAINST OTHERS, OR LITIGATE IN COURT OR ARBITRATE ANY CLAIMS AS A REPRESENTATIVE OR MEMBER OF A CLASS OR IN A PRIVATE ATTORNEY GENERAL CAPACITY.

Administration of Arbitration

The binding arbitration must be administered by the American Arbitration Association ("AAA") in accordance with its Commercial Arbitration Rules and/or Supplementary Procedures for Consumer- Related Disputes (including proceedings to mitigate costs of travel). This binding arbitration is governed by the Federal Arbitration Act ("FAA") (9 USC §1, et. seq.) and will govern the interpretation and enforcement. The binding arbitration shall be held at a location determined by AAA or at such other location as mutually agreed. In addition to the terms stated above, the following will apply to the binding arbitration: (1) the arbitrator, and not any federal, state, or local court or agency, will have exclusive authority to resolve any dispute relating to the interpretation, applicability, enforceability or formation of this agreement including any claim that all or any part of this agreement is void or voidable; (2) the arbitrator shall apply Missouri law consistent with the FAA.

Please contact the following to find a local distributor who sells ProTeam products.

United States

1 Ryan, Saffel & Associates
AK, WA, OR
423 South 3rd St.
Renton, WA 98055
(425) 277-1200
FAX (425) 271-8282
rsaf@ryansaffel.com

2 Nexus
Northern CA, Northern NV
7042 Commerce Circle, Suite B
Pleasanton, CA 94588
(510) 567-1000
(800) 482-6088
FAX (510) 567-1005
brenda@nexus-now.com

3 Access Partners
Southern CA, Southern NV
9405 Haven Ave
Rancho Cucamonga, CA 91730
(626) 815-4200
FAX (626) 815-4300
dwright@accesspartners.biz

4 EKEA Sales and Marketing
HI
955 Kawaiahao St. #3
Honolulu, HI 96814
(808) 208-8010
rkimura@EKEAsales.com

5 Avision Sales Group
MT, ID, WY, UT, CO, AZ, NM, El Paso
4665 Joliet Street
Denver, CO 80239
(303) 373-1940
FAX (303) 867-4308
sonia.nunn@avisionteam.com

6 Access Partners
ND, SD, MN, Northwest WI
7106 Ohms Lane, Ste. 210
Minneapolis, MN 55439-2129
(952) 896-1890
FAX (952) 896-1970
dbrown@accesspartners.biz

7 Avision Sales Group
NE, IA, KS, MO
533 N. Lindenwood, Suite A
Olathe, KS 66062
(913) 393-0132
FAX (913) 393-0543
robbie.crowder@avisionteam.com

8 Avision Sales Group
OK, AR, TX, LA
20212-Bldg 3 Hempstead Rd.
Houston, TX 77065
(713) 864-2947
robbie.crowder@avisionteam.com

9 Osborne Sales Group
IN, OH, Western PA, KY, WV
4010 North Bend Road, Suite 101
Cincinnati, OH 45211
(513) 481-6200
(800) 837-4933
FAX (513) 389-3992
sales@osbornegroup.net

10 Hinton Sales, Inc.
TN, MS, AL, GA
6659-D Peachtree Industrial Blvd.
Norcross, GA 30092
(770) 326-6455
(800) 344-2638
FAX (770) 326-6189
abby@hintonsales.com

11 Kenerson Associates, Inc.
Upstate NY
152 Bradlee Road
Milton, MA 02186
PH: 617-851-0860
tkenerson@kenerson.com

12 Market Advantage Plus
VT, NH, ME, MA, CT, RI
56 Leonard St., Unit 4
Foxboro, MA 02035
(508) 543-3605
FAX (508) 543-7147
info@marketadvantageplus.com

13 Avision Sales Group
Northern NJ, Metro NY, Long Island, NY
73 Cedar Avenue
Hershey, PA 17033
(717) 533-3601
(888) 381-8892
FAX (717) 533-4671
frasier.mango@avisionteam.com

14 Buckley & Associates
Eastern PA, DE, MD, DC, VA, NC, SC,
Southern NJ
15 4125 Lafayette Center Dr., Suite 150
Chantilly, VA 20151
(703) 631-8138
FAX (703) 631-7841
mbuckley@buckleyrep.com

15 Avision Sales Group
FL, Caribbean
3650 Coral Ridge Dr., Suite 112
Coral Springs, FL 33065
(954) 255-5061
(800) 866-0618
FAX (800) 860-0618
michele.brainard@avisionteam.com

16 Avision Sales Group
MI, IL, WI
305 Canal Street
Lemont, IL 60439
(630) 257-0001
FAX (630) 257-0005
lisa.wood@avisionteam.com

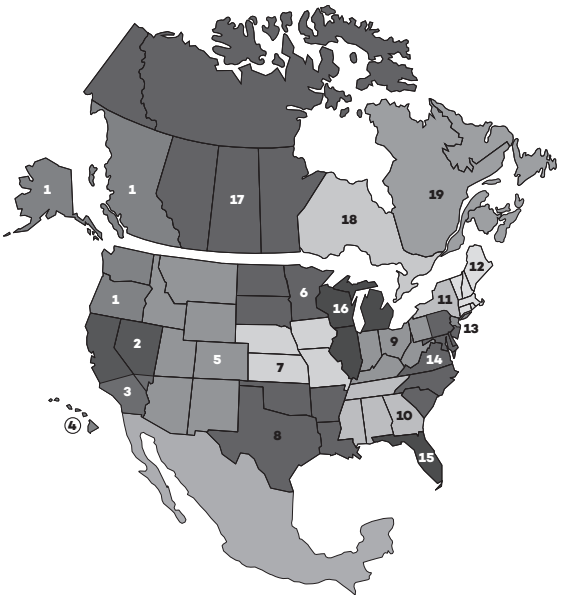

Canada

1 Ryan, Saffel & Associates
British Columbia
423 South 3rd St.
Renton, WA 98055
(425) 277-1200
FAX (425) 271-8282
rsaf@ryansaffel.com

17 DKB Marketing, Inc.
Western Canada (except BC)
AB, MB, SK
117 Tuscany Springs Landing
Calgary, AB Canada T3L 3B9
(403) 861-1176
dbenoit@dkbmarketing.ca

18 McConnell-Spadafora
Ontario
ON excluding Greater Ottawa
850 Legion Road, Unit 4
Burlington, ON Canada L7S 1T5
(905) 681-9563
(866) 700-8889
FAX (905) 681-1727
jaclyn@msireps.com

19 GNB Consulting
Eastern Canada
Greater Ottawa, QC, NB, NS,
PEI, NL
30 rue Neuville
Ile-Perrot QC Canada J7V 8L1
(514) 704-6064
nina.belanger@icloud.com

EMERSON

FOR MORE INFORMATION ABOUT OUR COMPLETE LINE OF COMMERCIAL VACUUMS
12969 Manchester Road, St. Louis, MO 63131
866.888.2168 • proteam.emerson.com • customerservice.proteam@emerson.com

101770 Rev 6/25