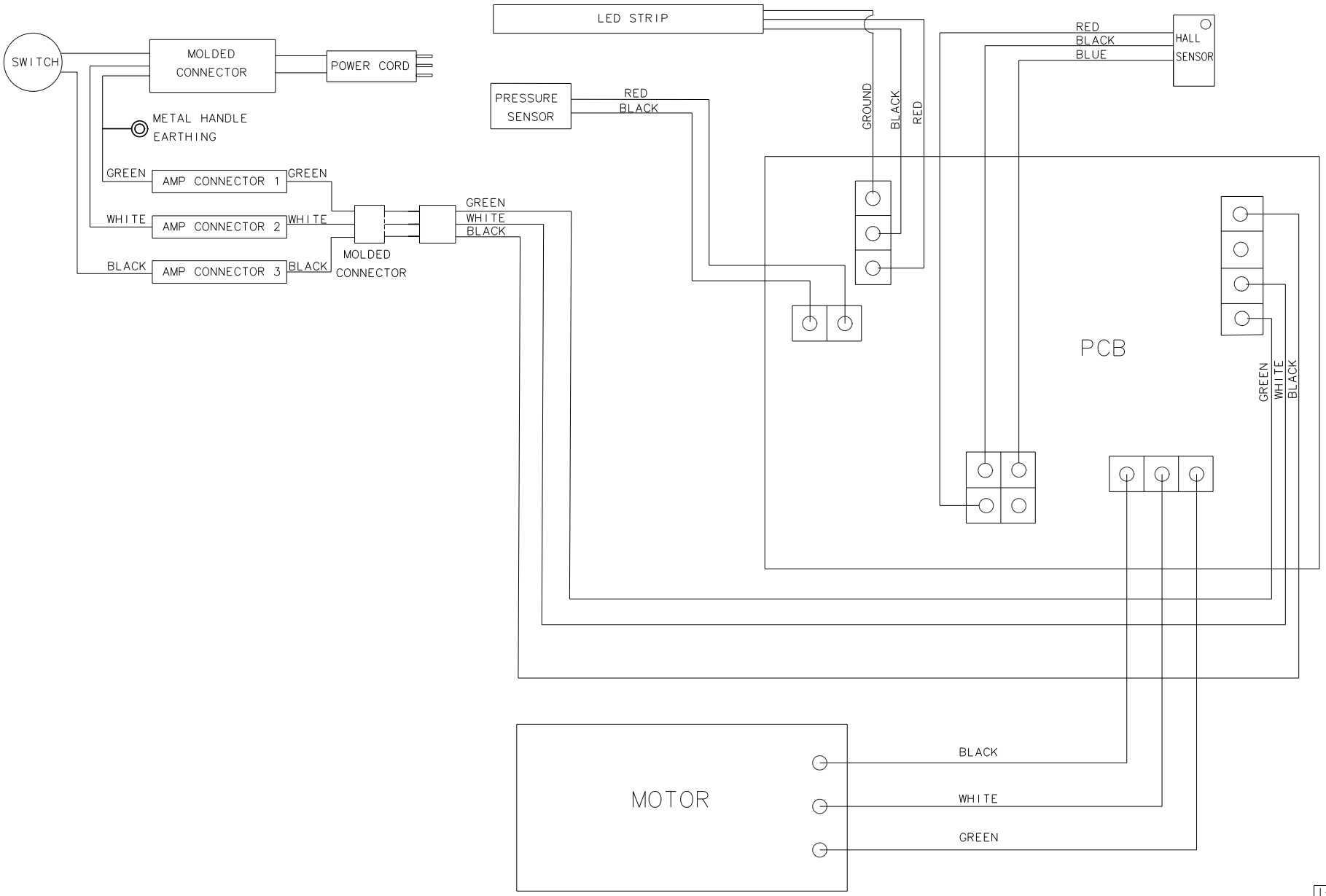

LET	REVISION RECORD	E/C	REV	DATE	DR
	RELEASED FOR PRODUCTION		000	10-28-13	PS
	UPDATED DRAWING	B0951	001	05-23-14	RE

I-DEAS
2D DRAWING

THIRD ANGLE PROJECTION

EMERSON Professional Tools

EMERSON TOOL COMPANY
8100 WEST FLORISSANT
ST. LOUIS, MO 63136

TITLE
SCHEMATIC WIRING DIAGRAM

DRAWN BY	DATE
P. SAWANT	10-23-13
CHKD BY	DATE
P. SAWANT	10-23-13
APPD BY	DATE
J. THEISING	10-23-13

FINISH USED ON: XXX

LINEAR DIM'S. ARE

SCALE NTS

FINISH

TOL. U. O. S.

DEC.	IN.	MM
1 PL.	--	+.5
2 PL.	+.02	+.2
3 PL.	+.008	--

ANGLES: 1°

MATERIAL

SIZE	DRAWING NUMBER		
D04	835154	0	000

© 2013 EMERSON ELECTRIC CO.